MID-T-BAKING OF SRF CAVITIES DRIVEN BY RF POWER*

R. Schöder[†,1], H.-W. Glock, J.[1], Knobloch[1,2], A. Velez[1,3]
[1]Helmholtz-Zentrum Berlin für Materialien und Energie, Berlin, Germany
[2]University of Siegen, Siegen, Germany
[3]Technical University Dortmund, Dortmund, Germany

Abstract

Mid-T (ca. 220 to 350 °C) heat treatment is known to improve the dissipation of superconducting Nb cavities by dissolving the surface oxide and diffusing oxygen into the near-surface bulk. HZB explores the use of RF power coupled into the cavity as a technique to perform the heat treatment directly in the cryostat, thereby also avoiding venting and re-oxidation following the treatment. Such an RF-driven heating may be an attractive option for in-situ processing of an operation-ready accelerator module. We have demonstrated effective RF heating both with a TESLA-9-cell and a 1.5 GHz single-cell cavity reaching temperatures of 207 °C (TESLA cavity) and 260 °C (VSR single cell). Whilst the TESLA-cavity was driven via the fundamental power coupler using various modes of the fundamental passband, the single cell was heated using a higher-order mode at 4.263 GHz. The later was selected because of both its strong coupling and acceptable homogeneity of RF power dissipation. Experiments took place in two cryostats, HZB's HoBiCaT and the Large Vertical Test Stand (LVTS), operated under elevated temperatures. In this paper, details of the experimental setup and process, heating performance and, in case of the single cell, a subsequent cold test are reported.

INTRODUCTION

Recent investigations [1–3] indicated the potential to improve the performance of superconducting cavities by a thermal cavity treatment in a moderate temperature range of ca. 220 to 350°C whilst evacuated. Originally vacuum ovens are used [2], but also heating set-ups with ohmic heaters placed on the outer surface of cavities proved feasibility [4]. In this study we omit the use of external heaters and investigate whether rf fields in the cavity may be utilized to heat the cavity walls accordingly. Under most favourable conditions, rf installations like transmitter, rf power lines and couplers that already exist for the regular cavity operation may be utilized with only minor modifications to provide heating power. The feasibility of performing rf mid-T bake is further studied and described in this paper (in parts already in [5, 6]; also an independent study [7]) by testing the thermal reaction of cavities to the excitation with different modes (fundamental passband and HOMs) with the goal to obtain the necessary temperatures for sufficiently long periods of time.

* Work supported by the Helmholtz Association.
† rene.schoeder@helmholtz-berlin.de

EXPERIMENTAL

Two rf heating experiments are presented here. The first one investigates heating of a multi-cell TESLA 9-cell cavity making use of the fundamental passband mode and the limited coupling ranges provided by standard FPC components (TTF III). The second focuses on the use of higher-order modes (HOMs) as an alternative way to provide both larger coupling values and homogeneous energy deposition. To this end a 1.5 GHz VSR single-cell cavity [8] underwent a heating test with the intention to demonstrate a proper rf heating performance and, if possible, apply a full mid-T bake-out recipe as described in [4]. As it is later described a cold Q_0 vs. E_{acc} characterization of the the cavity was finally carried out. Figure 1 shows a schematic of the first experimental setup at the Horizontal Bi-Cavity Test Stand (HoBiCaT) [9]. A Rohde & Schwarz ZNB20 vector network analyzer (VNA) was used to drive a Cryoelectra CRE-350F 1.3 GHz, 15 kW CW solid-state power amplifier. The rf power was fed by a TTF-III coupler into the TESLA cavity, such fully utilizing rf installations primarily intended for cold cavity operations. The cavity under test is an undressed 1.3 GHz 9-cell (RRR300, fine grain). Its field profile is not flat, as verified by bead-pull measurements [6]. Due to open beam pipes, the cavity volume and the test vessel shared the same insulation vacuum. The cavity pickup signal was looped back to the VNA, such providing a full S_{21} measurement during amplifier operation in any required frequency range. This was used both for mode selection, frequency

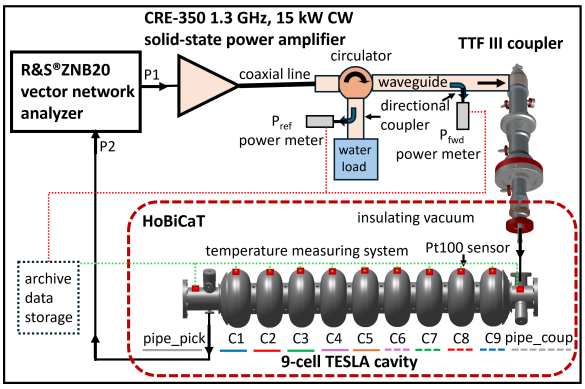

Figure 1: Schematic overview of the experimental setup at [9]. The rf heating system is driven by a vector network analyzer (VNA) and a solid-state power amplifier. The temperature measurement system comprises sensors mounted on each cell of the TESLA 9-cell cavity as well as on the beam pipes. The waveguide is connected to the cavity via a TTF-III coupler.

PREPRINT

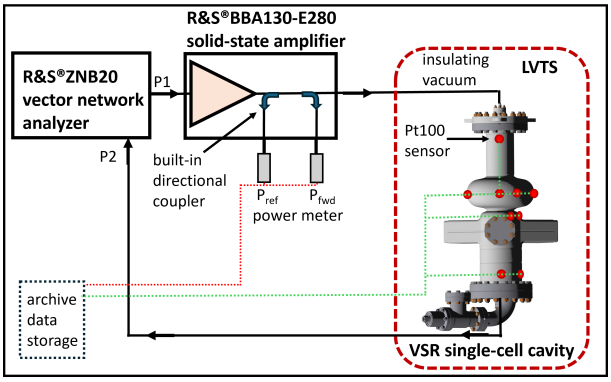

Figure 2: Schematic overview of the experimental setup at LVTS. The RF heating system is driven by a vector network analyzer (VNA) and a solid-state power amplifier. The temperature measurement system comprises sensors mounted azimuthally on the cell equator of the VSR single-cell cavity, as well as on the beam pipes.

fine tuning and bead pull measurements. Additional power meters directionally coupled to the waveguide were used to monitor P_{fwd} and P_{ref}. Cavity temperatures were measured at the cell equator positions and both beam pipes using Pt100 sensors. The cavity was wrapped in a few layers of aluminium foil, which gaves a thermal radiation shielding estimated to be lower than that of typical multilayer insulations.

The campaign with the 1.5 GHz VSR single cell cavity utilized a similar setup at HZB's LVTS (cf. Fig. 2). Here a R&S BBA130-E280 broadband amplifier was used to amplify the driving signal from the VNA. The power meters were directly attached to the amplifier's built-in directional couplers. The cavity features on-axis antennas on each beam pipe's blind flange; the one on the narrow beam pipe was used as main coupler. The S_{21}-loop again was closed measuring the signal of cavity pickup, located at the opposite end, with the VNA. The cavity vacuum was pumped independently from the insulation vacuum. Temperatures were measured with Pt100 sensors at five cell equator positions (two of which failed during the measurement but delivered meaningful data while working), two at the iris between cell and endgroup and three more positions on the beam pipes. Thermal radiation from the cavity was shielded by a complete aluminium foil wrapping.

RESULTS

Several heating tests with the 9-cell cavity (in more details described in [6]) revealed the significantly different heat patterns of different modes of the fundamental passband. Most of those experiments used just a single mode, whilst Fig. 3 illustrates the outcome of alternating the driving modes in order to get a high overall temperature level with only modest deviations between cells. A range of 378 K (C9) to 438 K (C5, C6) was reached after ca. 4.5 h of heating with an incident power between 1800 W and 2000 W. Detailed modeling resulted in an effective dissipated power of 140-

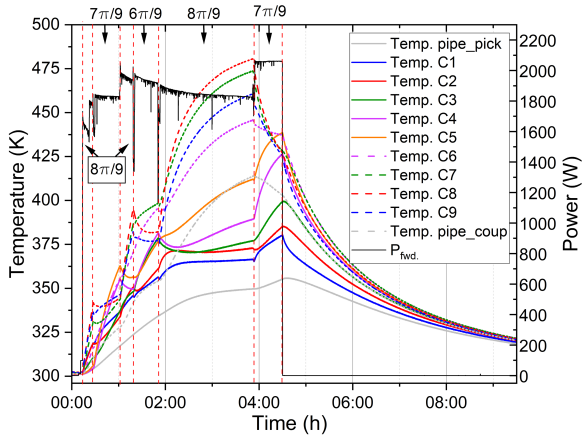

Figure 3: Time-dependent temperature measurements during multimode operation for each cavity cell (colored) and the beam pipes (gray). The smoothed P_{fwd} is shown in black. Heating periods for the different modes are separated by red dashed lines.

160 W in the $6\pi/9$ and $7\pi/9$ modes, and 210-240 W in the $8\pi/9$ mode, due to significant undercoupling determined by the coupler's mechanical limitations. A continuous tuning of the driving frequency was needed in order to compensate for the thermal expansion of the cavity. This was, for both cavities, accomplished by monitoring the S_{21} around the resonance maximum with a bandwidth of 20 to 50 kHz.

Guided by the experience with the 9-cell cavity, the experiments with the VSR single-cell were intended to validate the option to use HOMs for heating purposes. Whilst strongly depending on the actual cavity and antenna geometries, HOMs offer multiple chances to find frequencies with high coupling strenghts at room temperature which also offer highly homogeneous wall current distributions, considering some thermal equilibration through heat conduction in the wall. The mode used (4.263 GHz) was identified by measuring the frequency response of the cavity in a large frequency range to identify the modes with highest coupling strengths and experimentally found by checking the heating characteristics of the best candidates. A power exposition

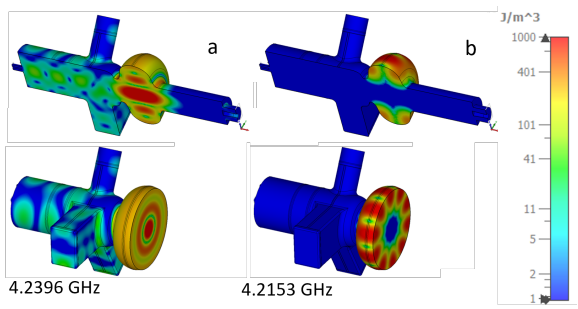

Figure 4: EM simulation of the magnetic energy density for two strongly coupled HOMs suitable for cell heating (CST Studio Suite® [10]): (a) monopole mode at 4.2396 GHz, showing partial coupling to the damping waveguides and the enlarged beam pipe; (b) decapole mode at 4.2153 GHz with 10-fold rotational symmetry.

PREPRINT

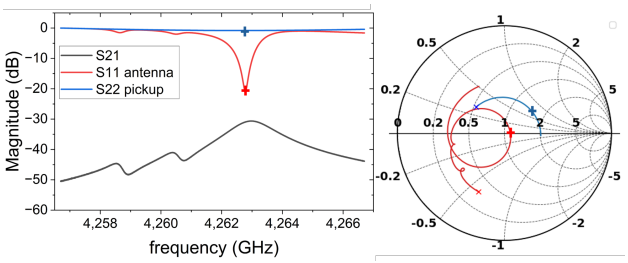

Figure 5: S_{11}, S_{22}, and S_{21} measurements of VSR 1.5 GHz single-cell cavity. Matching characteristics for both main antenna and pick up are shown on the right.

of about a minute was sufficient to identify those few modes with strong heating reactions mainly localized in the cavity, whilst most of them also deposited significant power in the beam pipes. An a-posteriori numerical analysis (cf. Fig. 4) to identify the mode type delivered two candidates within a reasonable frequency range to the experimental value. An exact mode determination is not possible due to the proximity in frequency and mode hybridation can not be excluded. In practice the mode showed almost ideal coupling to the input antenna (narrow beam pipe side) (cf. Fig. 5). This is depicted in Fig. 6 by comparing the forwarded (52 dBm) and the reflected power (15 dB lower). Heating was observed to be very homogeneous around the cell's equator since temperature deviations of sensors around the equator remained lower than 4 K. Sensors in the iris region also registered similar temperatures (about 30 K below cell equator). Slight deviations are attributed to the different locations (waveguide/power coupler port). Beam pipes remained significantly (> 40 K) cooler, indicating that they are mainly heated by conduction and/or radiation. The cavity reached 230 °C in a period of 3 h. The maximum temperature achieved was 260 °C after 4.5 h. Due to a vacuum insulation incident, the power was reduced to stabilize the system at different lower levels.

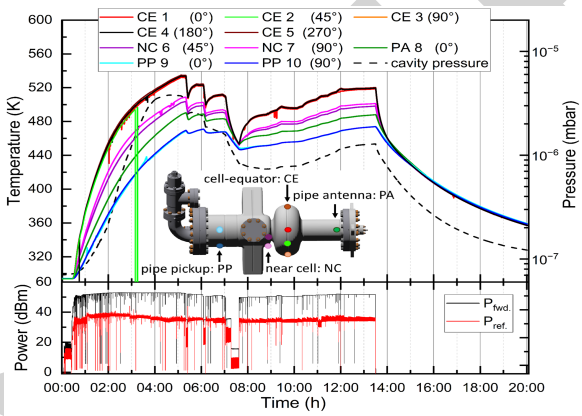

Figure 6: Time-dependent temperature measurements in an HOM operation at 4.263 GHz. Sensor positions are shown in the inset (The CE 4 position is directly opposite CE 1 on the backside of the cavity.) The cavity pressure is represented by the dashed black line. Power meter readout shown below (P_{fwd} (black), P_{ref} (red)).

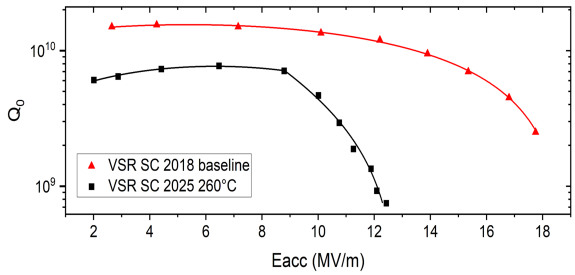

Figure 7: Q_0 vs. E_{acc} curves at 1.8 K. The red data correspond to initial tests in 2018. The black curve represents the test after the mid-t bake-out shown in Fig. 6.

As the process proved to be technically successful, a subsequent experiment was conducted to carry out a full mid-T bake-out. The intended treatment parameters were derived from [11], assuming an initial Nb_2O_5 layer thickness of 3-5 nm and approximating the duration of the layer reduction by stepwise temperature-time integration leaving a residual layer larger than 1 nm. A later cold test followed inside the same cryostat to characterize the Q_0 vs. E_{acc} response and compared to the baseline measurement previous to the baking procedure. However, the applied process did not lead to an improvement in the Q_0 vs. E_{acc} performance (cf. Fig. 7). This can be due to several reasons such as an initially thinner than expected Nb_2O_5 layer or over-processing leading to possible carbide formation and Q degradation.

CONCLUSIONS

Rf heating of SRF cavities for in situ mid-t bake-out in multi-cell structures making use of installed infrastructure is proved to be feasible despite the challenges introduced by utilizing standard components such TTF III couplers. The reduced amount of energy transmitted in the fundamental passband due to the low coupling could otherwise be compensated with sufficient amplifier power. In addition, the multi-cell structure of this cavity introduces intrinsic challenges regarding heating homogeneity that need to be addressed in future work.

Alternatively the use of HOMs enables potential high coupling levels and sufficient homogeneity on the wall dissipated energy. This has been demonstrated by homogeneously heating a 1.5 GHz VSR single-cell cavity up to 260 °C and for several hours above 240 °C with the goal to perform a mid-T bake-out. As it was shown the procedure led to a degradation in Q due to over-processing and is currently under investigation.

ACKNOWLEDGEMENTS

HZB gratefully acknowledges the helpful support of R&S, Munich, Germany in providing on short notice an BBA130-E280-type amplifier which allowed to extend the range of the study beyond otherwise available power ratings.

PREPRINT

REFERENCES

[1] S. Posen, A. Romanenko, A. Grassellino, O. S. Melnychuk, and D. A. Sergatskov, "Ultralow surface resistance via vacuum heat treatment of superconducting radio-frequency cavities", *Phys. Rev. Appl.*, vol. 13, no. 1, p. 014024, 2020. doi:10.1103/PhysRevApplied.13.014024

[2] H. Ito, H. Araki, K. Takahashi, and K. Umemori, "Systematic Investigation of Mid-T Furnace Baking for High-Q Performance", in *Proc. SRF2021*, pp. 881–884, 2021. doi:10.18429/JACoW-SRF2021-FROFDV01

[3] C. Bate *et al.*, "Correlation of srf performance to oxygen diffusion length of medium temperature heat treated cavities", *Supercond. Sci. Technol.*, vol. 38, p. 025003, 2025. doi:10.1088/1361-6668/ad9fe8

[4] Y. Tamashevich, A. Prudnikava, A. Matveenko, A. Neumann, O. Kugeler, and J. Knobloch, "Improved RF performance of niobium cavities via in-situ vacuum heat treatment technique", *Supercond. Sci. Technol.*, vol. 38, no. 4, p. 045006, 2025. doi:10.1088/1361-6668/adbce3

[5] H.-W. Glock, J. Knobloch, J.-M. Köszegi, and A. Velez, "RF heating experiments with a TESLA-9-cell cavity towards in-situ low- / mid-T-baking", *arXiv*, 2024. doi:10.48550/arXiv.2412.13628

[6] R. Schöder, H.-W. Glock, J. Knobloch, and A. Velez, "Numerical modeling and experimental investigation of rf heating for midtemperature baking of a TESLA 9-cell srf cavity", *Phys. Rev. Accel. Beams*, vol. 29, no. 7, p. 074401, Jul. 2026. doi:10.1103/wk7y-8n6d

[7] J. Goedecke *et al.*, "Rf in-situ heating of a single and nine-cell 1.3 GHz cavity", in *Proc. IPAC2017*, Tokyo, Japan, pp. 758–761, 2025. doi:10.18429/JACoW-SRF2025-THP63

[8] A. Velez *et al.*, "The SRF module developments for BESSY VSR", in *Proc. IPAC2017*, pp. 986–989, 2017. doi:10.18429/JACoW-IPAC2017-MOPVA053

[9] J. Knobloch, W. Anders, D. Pflückhahn, and M. Schuster, "HoBiCaT – A Test Facility for Superconducting RF Systems", in *Proc SRF2003*, Lübeck/Travemünde, Germany, pp. 173–175, 2003.

[10] Dassault Systèmes, CST Studio Suite, Version 2024, Dassault Systèmes, Simulia Corp., Johnston, RI, USA. https://www.3ds.com/products/simulia/cst-studio-suite

[11] A. Prudnikava, Y. Tamashevich, A. Makarova, D. Smirnov, and J. Knobloch, "In-situ synchrotron x-ray photoelectron spectroscopy study of medium-temperature baking of niobium for SRF application", *Supercond. Sci. Technol.*, vol. 37, no. 7, p. 075007, 2024. doi:10.1088/1361-6668/ad4825

PREPRINT