DEVELOPMENT AND OPERATION OF 166.6 MHZ SRF MODULES AT HEPS

X. Zhang[1,2*], P. Zhang[1,2], Q. Ma[1,2], J. Dai[1], T. Huang[1,2], H. Zheng[1,2], F. Meng[1], Z. Mi[1,2], H. Lin[1], Q. Wang[1,2], D. Li[1], F. Zhao[1], S. Jin[1,2], J. Li[1,2]
[1]Institute of High Energy Physics, Chinese Academy of Sciences, Beijing 100049, China
[2]University of Chinese Academy of Sciences, Beijing 100049, China

Abstract

The storage ring of the High Energy Photon Source (HEPS) is driven by 166.6 MHz β=1 quarter-wave superconducting cavities. Five higher-order-mode-damped 166.6 MHz cavities were designed to provide a total of 850 kW beam power and to accelerate the electron beam to 200 mA. The beamline elements of the module were designed to meet the compact requirements. Given the large beam aperture of 505 mm to realize HOM damping, an exquisite clean assembly procedure was developed and demonstrated with excellent radio frequency (rf) performance preserved from vertical tests to horizontal tests. Five cryomodules have been successfully assembled and horizontally tested. The cavity's Q0 at the design voltage of 1.2 MV reached $1.4\times10^9 \sim 2\times10^9$ at 4 K corresponding to 5~7 W dynamic heat loads in the horizontal tests, comfortably exceeding the design goal. Field emission was less than 0.13 mSv/h during the entire test up to a rf voltage of 1.6 MV, equivalent to a peak electric field of 43 MV/m. Subsequently, five modules were installed in the HEPS tunnel. A beam current of 100 mA was successfully achieved in September 2025. This work represents the first successful implementation of superconducting QWRs as the main accelerating system for a high-current storage ring, thereby extending their application limits from the conventional use in low-beta accelerators to high-current electron storage rings, and establishing them as a proven technology for future high-performance light sources.

INTRODUCTION

The High Energy Photon Source (HEPS) is China's first fourth-generation synchrotron light source with ultra-low beam emittance [1–4]. Located in Huairou, Beijing, HEPS commenced construction in June 2019 and successfully passed its key performance acceptance test in October 2025.

A dual radio frequency (rf) system was employed for the storage ring to achieve bunch lengthening, thereby enabling the novel on-axis accumulation beam injection scheme [5]. Due to the low frequency of 166 MHz, the ellipsoidal cavity typically used for electron acceleration was no longer feasible because of its excessive size. Instead, a quarter-wave superconducting cavity featuring a novel acceleration path [6] was adopted. This active superconducting rf (SRF) cavity offers a practically realizable size while being capable of accelerating relativistic electrons. Under an operating current of 200 mA, the higher-order modes (HOMs) of the cavity must be effectively damped by dedicated HOM absorbers. The high continuous-wave input power of 170 kW per cavity presented another challenge for both cavity design and stable operation. Two cryomodules were required to be accommodated within a 6-meter straight section, necessitating a compact cavity string design that met multiple requirements, including low beam impedance, proper collimation, reasonable cryogenic heat loads, mechanical robustness, and maintainability. Furthermore, a sufficiently large margin in rf performance is essential to ensure the stable operation of HEPS as a user facility.

SRF MODULE DESIGN

SRF Cavity and String

The electromagnetic field optimization and favorable performance of the PoP cavity [7–9] were retained in the design of the 166 MHz HOM-damped cavity. At an operating voltage of 1.2 MV, a margin of 25% on the peak fields was reserved. Increasing the large beam pipe diameter from 170 mm to 505 mm was selected as the baseline among various HOM suppression schemes for its simplicity, reliability, and compliance with the stringent damping requirements [10]. The 166.6 MHz jacketed cavity model and its electromagnetic field distributions are shown in Fig. 1.

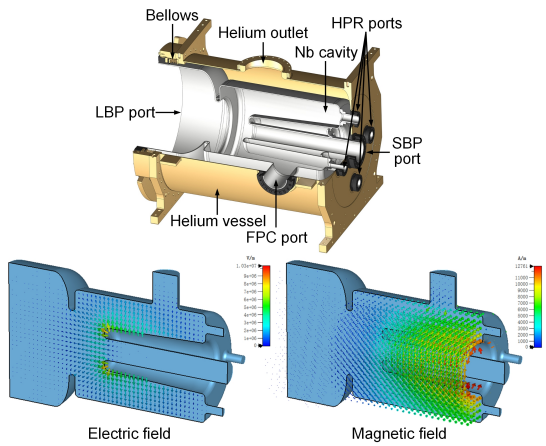

Figure 1: The 166.6 MHz cavity model and its electromagnetic field distributions.

The beam enters through the small beam pipe (SBP) and exits through the large beam pipe (LBP). Increasing the LBP diameter to three times its original size introduced numerous challenges to the cavity's mechanical design. Stresses at mul-

* Email: zhangxinying@ihep.ac.cn

PREPRINT

tiple locations on the cavity, such as the high-pressure rinsing (HPR) ports, the short-end plate, the iris, and connecting fillets, exceeded allowable limits. Local wall thickness enhancements, stiffeners at critical locations, and dedicated test tooling were designed to ensure the cavity met stress safety requirements under all operating conditions. Due to the inherently limited tuning range of the QWR cavity [11, 12], the frequency was monitored throughout fabrication and integration, with interventions to ensure it reached 166.6 MHz. The electromagnetic and mechanical parameters of the 166.6 MHz HOM-damped cavity are listed in Table 1.

Table 1: The Parameters of the 166.6 MHz Cavity

Parameter	Value	Unit
Frequency	166.6	MHz
Cavity length/height	880/630	mm
Operating voltage V_{op}	1.2	MV
E_{peak} / E_{acc}	3.18	
B_{peak} / E_{acc}	4.97	mT/(MV/m)
Q_0 at HT (V_c = 1.2 MV)	$\geq 5\times10^8$	
R/Q ($=\lvert V\rvert^2/\omega U$)	139	Ω
Geometry factor G ($=R_s\cdot Q_0$)	56	Ω
External Q	5×10^4	
Nominal input c.w. rf power	170	kW
Frequency tuning range (4 K)	76.6	kHz
Pressure sensitivity (df/dp)	20.3	Hz/mbar
LFD coefficient	-0.9	Hz/(MV/m)^2
Lowest mechanical mode	108	Hz

To deliver a minimum of 170 kW of rf power from each cavity to the beam, a 250 kW fundamental power coupler (FPC) was designed [13, 14]. The HEPS 200 mA beam current required deep damping of HOMs in the 166.6 MHz cavities to avoid coupled multibunch instabilities. A room-temperature HOM absorber was designed. The simulation results of the HOMs, impedance thresholds, and HOM measurement results are shown in Fig. 2. The first monopole HOM at 464 MHz marginally met the impedance requirement, while all other modes were comfortably below their respective impedance thresholds. The measured frequency spread of the first monopole HOM among five modules was 0.4 MHz, increasing the impedance threshold by a factor of 1.7 and thus satisfying the damping requirements.

A compact cavity string was designed, as shown in Fig. 3. Within the 6-meter straight section, two identical and interchangeable cryomodules were adopted to enhance operability and maintainability [15]. The optimized thermal break beam tubes (TBTs) reduced the overall static heat load to 10.1 W. The water-cooled collimator on the taper effectively shielded synchrotron light. Under the operating mode with a bunch length of 5.06 mm, the loss factor was calculated to be 2.6 V/pC for each 166.6 MHz module. Five cavities contribute ~19% of the total longitudinal loss factor without harmonic cavities for the HEPS storage ring.

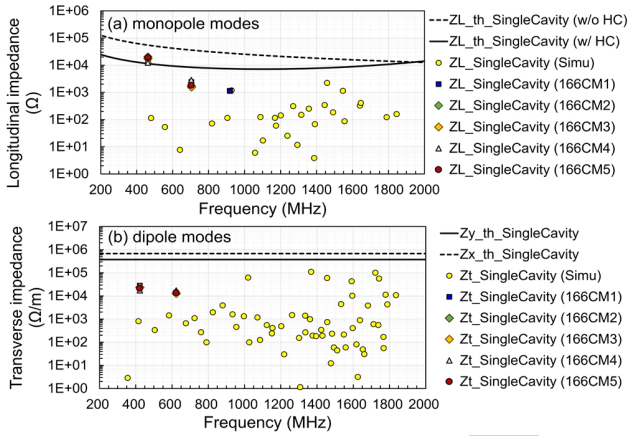

Figure 2: HOM damping results and the absorber model.

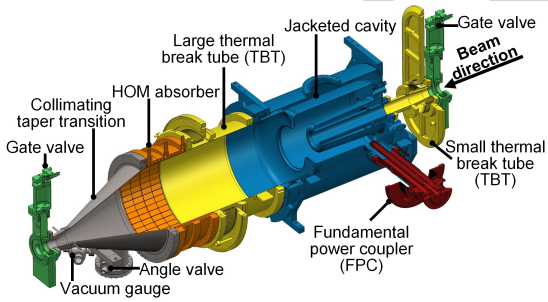

Figure 3: The 166.6 MHz cavity string.

Cryostat Design

The 166 MHz cryomodule had a length of 2792 mm and a height of 2065 mm, and the model was shown in Fig. 4. A two-phase pipe above the helium vessel increased the total liquid helium (LHe) capacity to 157 L. The thermal analysis of the 166.6 MHz cryostat was detailed in a previous publication [16]. To facilitate shielding of the Earth's magnetic field, the cavity beam axis was oriented east-west. A dual-layer magnetic shield was developed, with a measured residual field of 30 mG inside the inner shield, meeting the design requirements. The tuner was mounted on the endplate outside the cryostat and operated at room temperature.

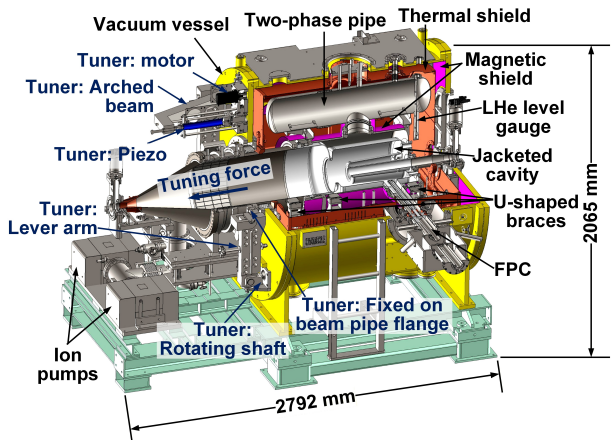

Figure 4: The 166.6 MHz cryomodule.

PREPRINT

MODULE INTEGRATION AND HORIZONTAL TEST

Cavity String and Cryomodule Integration

The cryomodule integration involved four steps, as shown in Fig. 5. First, the entire cavity string was assembled in a Class 10 cleanroom. To facilitate sealing of 505 mm inner diameter flanges, all large-aperture components were assembled vertically using a custom multi-directional adjustable fixture and a large heavy-duty forklift. Second, the cavity string was integrated with the cryostat to form an intermediate assembly. The vessel was subsequently leak-checked. Third, the ion-pump group was assembled with the intermediate assembly in the cleanroom, thereby finalizing the core module structure. Fourth, the tuner and FPC T-box were installed to complete the cryomodule. This process required only one vacuum break, with the sealing port located far from the cavity and oriented downward to minimize potential contamination during installation.

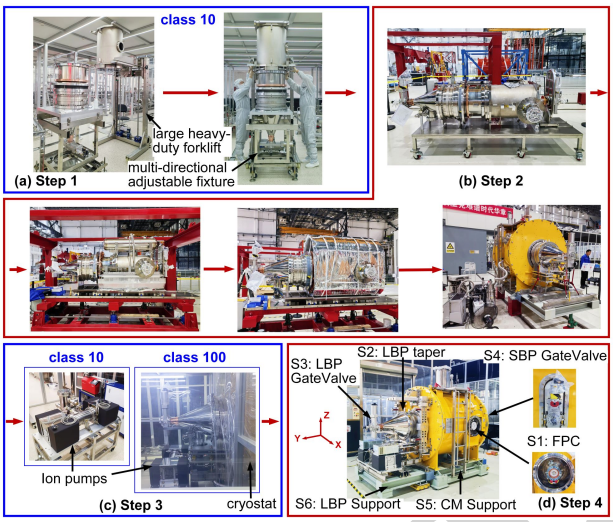

Figure 5: The 166.6 MHz cryomodule integration process.

Cryomodule Horizontal Test

After assembly, horizontal tests were performed on all five cryomodules. Due to the relatively large cavity size, a maximum temperature difference of 10 K and a maximum rate of 5 K/h were enforced during cooldown to prevent vacuum leaks. After a 7~11 day cooldown to 4.2 K, the resonant frequencies of all five cavities were successfully adjusted to 166.6 MHz using mechanical tuners. After heater calibration to determine the coefficient between helium boil-off rate and applied heater power, the static heat load (rf off) and total heat load (rf on) were measured, from which the dynamic heat load and Q0 were derived. At the operating voltage of 1.2 MV, the dynamic heat load of all five modules was only 5~7 W, and the Q0 values exceeded 1.4×10^9, significantly surpassing the design specifications, as shown in Fig. 6. The maximum radiation dose was a few tens of μSv/h, which is within an acceptable range. All modules were tested up to 1.6 MV, corresponding to a peak electric field of 43 MV/m.

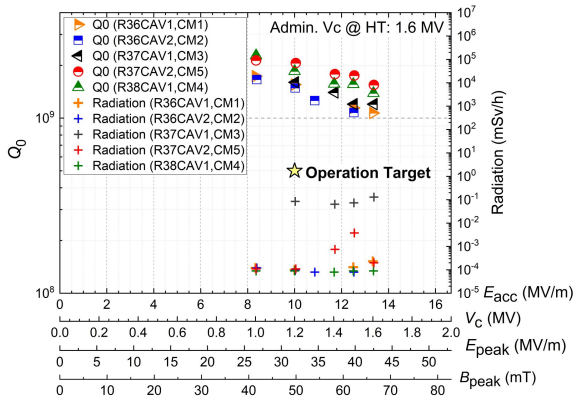

Figure 6: Quality factor and radiation level of the modules.

INSTALLATION AND BEAM OPERATION IN THE TUNNEL

Each cryomodule, equipped with six accelerometers (Fig. 5), was loaded onto an air-ride flatbed truck and transported to the HEPS tunnel. The accelerations during transportation remained below 0.5 g. The five cryomodules installed in the HEPS storage ring tunnel are shown in Fig. 7.

All five cavities were conditioned at room temperature and 4.2 K. Beam commissioning of HEPS with the nominal SRF cavity setup began on August 12, 2025, and the beam current gradually exceeded 100 mA on September 12, 2025 [17].

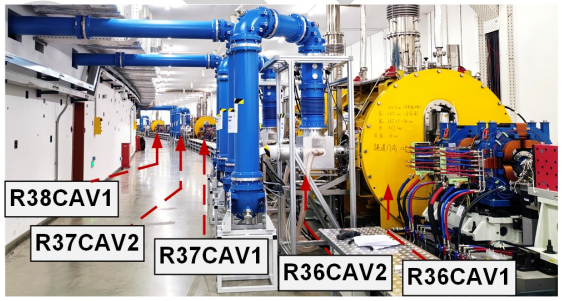

Figure 7: Five 166 MHz modules installed in the HEPS.

CONCLUSION

The in-house developed 166.6 MHz $\beta = 1$ quarter-wave SRF cryomodules have been successfully applied in the fourth-generation synchrotron light source HEPS. The cavities exhibit excellent performance, with a dynamic heat load of only 5~7 W at the operating voltage of 1.2 MV and negligible radiation dose. In September 2025, the beam current reached 100 mA and maintained stable operation. This milestone marks the successful development and continuous-wave stable operation of the world's first high-power, HOM-damped, 166 MHz quarter-wave $\beta = 1$ SRF modules.

ACKNOWLEDGEMENTS

This work was supported in part by the National Natural Science Foundation of China under Grant 12475166, and in part by High Energy Photon Source.

PREPRINT

REFERENCES

[1] Y. Jiao *et al.*, "Progress of Physics Studies and Commissioning Preparations for the High Energy Photon Source", in *Proc. IPAC'23*, Venice, Italy, May 2023, pp. 980-983. doi:10.18429/JACoW-IPAC2023-MOPM002

[2] H. Xu *et al.*, "Equilibrium electron beam parameters of the High Energy Photon Source", *Radiat. Detect. Technol. Methods*, vol. 7, pp. 279-287, 2023. doi:10.1007/s41605-022-00374-w

[3] H. Xu *et al.*, "First beam storage in the High Energy Photon Source storage ring", *Radiat. Detect. Technol. Methods*, vol. 9, pp. 70-81, 2025. doi:10.1007/s41605-024-00518-0

[4] Y. Dong *et al.*, "Commissioning and current status of High Energy Photon Source (HEPS)", presented at IPAC'26, Deauville, France, May 2026, paper TUI2M02, this conference.

[5] G. Xu *et al.*, "On-axis Beam Accumulation Enabled by Phase Adjustment of a Double-frequency RF System for Diffraction-limited Storage Rings", in *Proc. IPAC'16*, Busan, Korea, May 2016, pp. 2032-2035. doi:doi:10.18429/JACoW-IPAC2016-WEOAA02

[6] Q. Wu *et al.*, "Operation of the 56 MHz superconducting RF cavity in RHIC with higher order mode damper", *Phys. Rev. Accel. Beams*, vol. 22, no. 10, pp. 102001, 2019. doi:10.1103/PhysRevAccelBeams.22.102001

[7] P. Zhang *et al.*, "Development and vertical tests of a 166.6 MHz proof-of-principle superconducting quarter-wave beta = 1 cavity", *Rev. Sci. Instrum.*, vol. 30, no. 8, pp. 084705, 2019. doi:10.1063/1.5119093

[8] X. Zhang *et al.*, "The mechanical design, fabrication and tests of a 166.6 MHz quarter-wave beta=1 proof-of-principle superconducting cavity for HEPS", *Nucl. Instrum. Methods Phys. Res. A*, vol. 947, pp. 162770, 2019. doi:10.1016/j.nima.2019.162770

[9] X. Zhang *et al.*, "Design and Mechanical Performance of a Dressed 166.6 MHz β=1 Proof-of-Principle Superconducting Cavity in Horizontal Tests", *IEEE Trans. Appl. Supercond.*, vol. 30, no. 8, pp. 1-8, 2020. doi:10.1109/TASC.2020.2999541

[10] H. Zheng *et al.*, "Design Evolution of the Higher Order-Mode Damping in 166.6-MHz Quarter-Wave β=1 Superconducting Cavities for HEPS", *IEEE Trans. Appl. Supercond.*, vol. 34, no. 2, p. 3500309, 2024. doi:10.1109/TASC.2023.3341615

[11] C. Pai *et al.*, "Mechanical Design of 56 MHz Superconducting RF Cavity for RHIC Collider", in *Proc. PAC'11*, New York, USA, March 2011, pp. 907–909. https://jacow.org/PAC2011/papers/TUP054.pdf

[12] K. Fong *et al.*, "Production and Testing of Two 141 MHz Prototype Quarter Wave Cavities for ISAC-II", in *LINAC'08*, Victoria, Canada, Sep.-Oct. 2008, pp. 777–779. https://jacow.org/LINAC08/papers/THP003.pdf

[13] T. Huang *et al.*, "Development of fundamental power couplers for 166.6 MHz superconducting quarter-wave beta = 1 proof-of-principle cavities", *Rev. Sci. Instrum.*, vol. 91, no. 6, pp. 063301, 2020. doi:10.1063/5.0001540

[14] T. Huang *et al.*, "High-power tests and solution to overheating at cavity–coupler interface of the 166.6-MHz beta = 1 superconducting quarter-wave resonator for HEPS", *AIP Adv.*, vol. 11, no. 4, pp. 045024, 2021. doi:10.1063/5.0046377

[15] X. Zhang *et al.*, "Compact design of the 166.6 MHz superconducting cavity and its beamline elements for HEPS", *Nucl. Instrum. Methods Phys. Res. A*, vol. 1059, pp. 168972, 2024. doi:10.1016/j.nima.2023.168972

[16] R. Han *et al.*, "Thermal performance analysis and cryogenic experimental measurements of the 166.6 MHz cavity cryomodule for the High Energy Photon Source", *Nucl. Instrum. Methods Phys. Res. A*, vol. 1070, pp. 170000, 2025. doi:10.1016/j.nima.2024.170000

[17] P. Zhang *et al.*, "Commissioning of the RF System for High Energy Photon Source", presented at IPAC'26, Deauville, France, May 2026 paper MOO7M01, this conference.

PREPRINT