FROM RESEARCH TO INDUSTRY

SUPERCONDUCTING CAVITIES AND CRYOMODULES FOR PROTON AND DEUTERON LINACS

G. DEVANZ

CEA-Irfu,Saclay

OUTLINE

- ESS
  - SRF linac
  - Spoke
  - Ellipticals
    - Cavities
    - cryomodules
    - Power couplers
  - Future tests
- SPIRAL2
  - Test status
- IFMIF-LIPAc
  - Cryomodule
  - HWR
  - Power couplers
  - Test stand

ESS

ESS - SRF LINAC

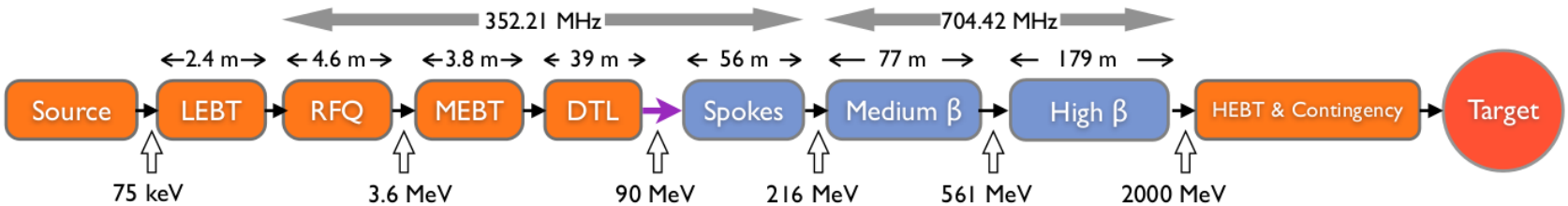

Requirements	Spoke	Medium	High
Frequency (MHz)	352.21	704.42	704.42
Geometric beta	0.50	0.67	0.86
Nominal Accelerating gradient (MV/m)	9.0	16.7	19.9
Epk (MV/m)	39	45	45
Bpk/Eacc (mT/MV/m)	<8.75	4.79	4.3
Epk/Eacc	<4.38	2.36	2.2
Iris diameter (mm)	50	94	120
RF peak power (kW)	335	1100	1100
G (Ω)	130	196.63	241
Max R/Q (Ω)	427	394	477
Qext	$2.85\ 10^{5}$	$7.5\ 10^{5}$	$7.6\ 10^{5}$
Q0 at nominal gradient	$1.5\ 10^{9}$	$> 5\ 10^{9}$	$> 5\ 10^{9}$

See M. Eshraqi THIOA01

Beam power (MW)	5
beam current (mA)	62.5
Linac energy (GeV)	2
Beam pulse length (ms)	2.86
Repetition rate (Hz)	14

	Num. of CMs	Num. of cavities
Spoke	13	26
6-cell medium β	9	36
5-cell high β	21	84

DESIGN AND PROTOTYPING OF THE SPOKE CRYOMODULE

Double Spoke SRF Cavities

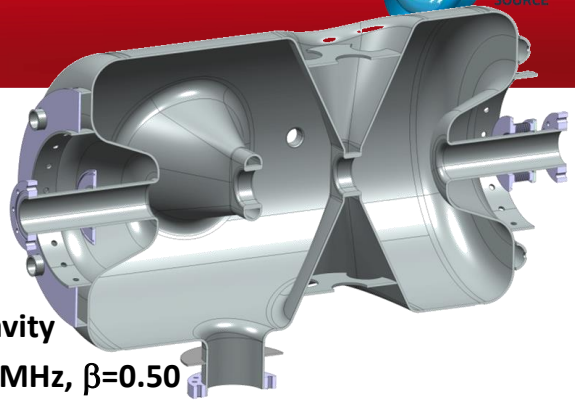

- Double spoke cavity (3-gaps), 352.2 MHz, β=0.50
- Goal: Eacc = 9 MV/m *[Bp= 72 mT ; Ep = 39 MV/m]*
- 4 mm (nominal) Niobium thickness
- Titanium Helium tank, Ti stiffeners
- Lorentz detuning coeff. : -4.4 Hz/(MV/m)^2
- Tuning sentivity $\Delta f/\Delta z$ = 128 kHz/mm
- 3 prototypes under fabrication (delivery sept & oct 2014)

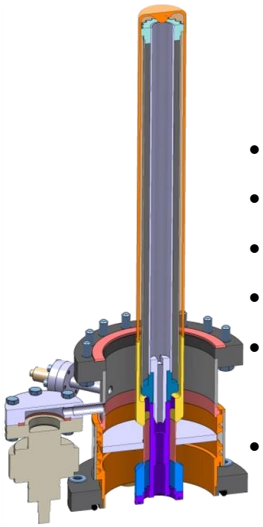

Power Coupler

- Ceramic disk, 100 mm diameter
- 400 kW peak power
- Antenna & window water cooling
- Outer conductor cooled with Lhe
- Doorknob transition from coaxial to ½ height WR2300 waveguide
- 4 prototypes under fabrication (delivery in early October 2014)

Cold tuning system

Poster THPP078

- Slow tuner (stepper motor):
  - Max tuner stroke: 1.28 mm
  - Max tuning range: 170 kHz
  - Tuning resolution: 1.14 Hz
- Fast tuning by 2 piezos actuators
  - Noliac 50x10x10 or PI 36x10x10 mm
  - Applied voltage up to +/- 120 V
  - Estimated tuning range: ~ 1 kHz
- 2 prototypes already fabricated

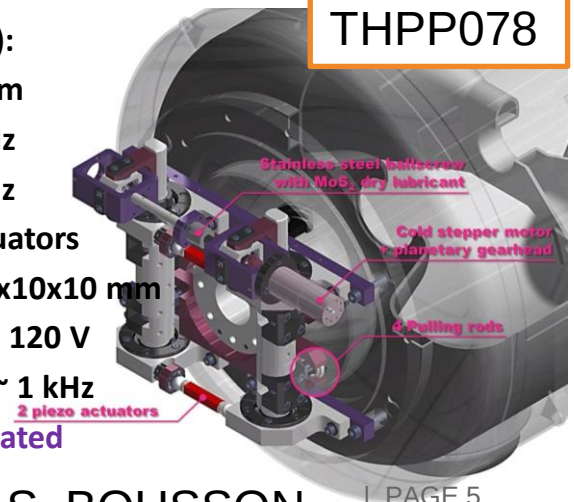

COURTESY S. BOUSSON

704.42 MHZ ELLIPTICAL CAVITIES

	Medium	High
Geometrical beta	0.67	0.86
Number of cells	6	5
Length (mm)	1259	1316
Nominal Accelerating gradient (MV/m)	16.7	19.9
Nominal Accelerating Voltage (MV)	14.3	18.2
Q_0 at nominal gradient	> 5e9	
Cavity dynamic heat load (W)	4.9	6.5
Q_{ext}	7.5 10^5	7.6 10^5
Iris diameter (mm)	94	120
Cell to cell coupling k (%)	1.2	1.8
π and $5\pi/6$ (or $4\pi/5$) mode separation (MHz)	0.53	1.2
E_{pk}/E_{acc}	2.35	2.2
B_{pk}/E_{acc} (mT/(MV/m))	4.78	4.3
Maximum. r/Q (Ω)	397	477
Optimum β	0.705	0.92
G (Ω)	197	241
Static KL (Hz/(MV/m)^2) with tuner	-2	-1

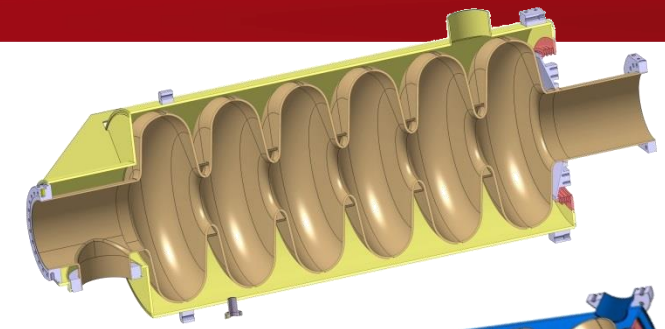

Medium β

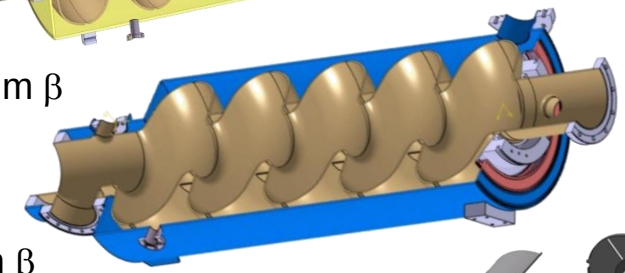

High β

Mag. shield

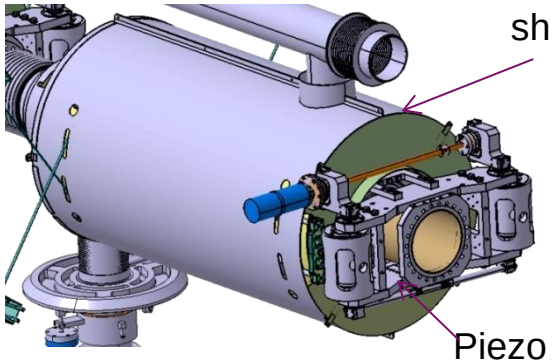

Piezo tuner

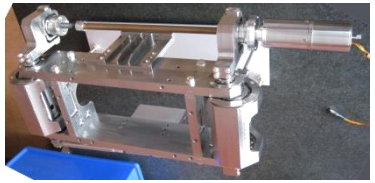

- No HOM couplers
- Cold magnetic shield over the He jacket (target 1.4 μT)
- Use as far as possible tesla technology material (Ti tank, Al gaskets)

HIGH BETA PROTOTYPES

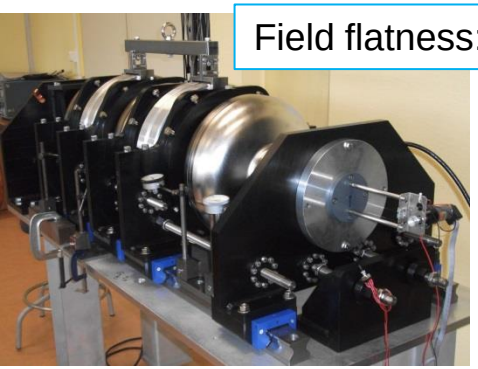

Field flatness:92%

FNP 1-1-2.4 etching performed on BCP/EP cabinet

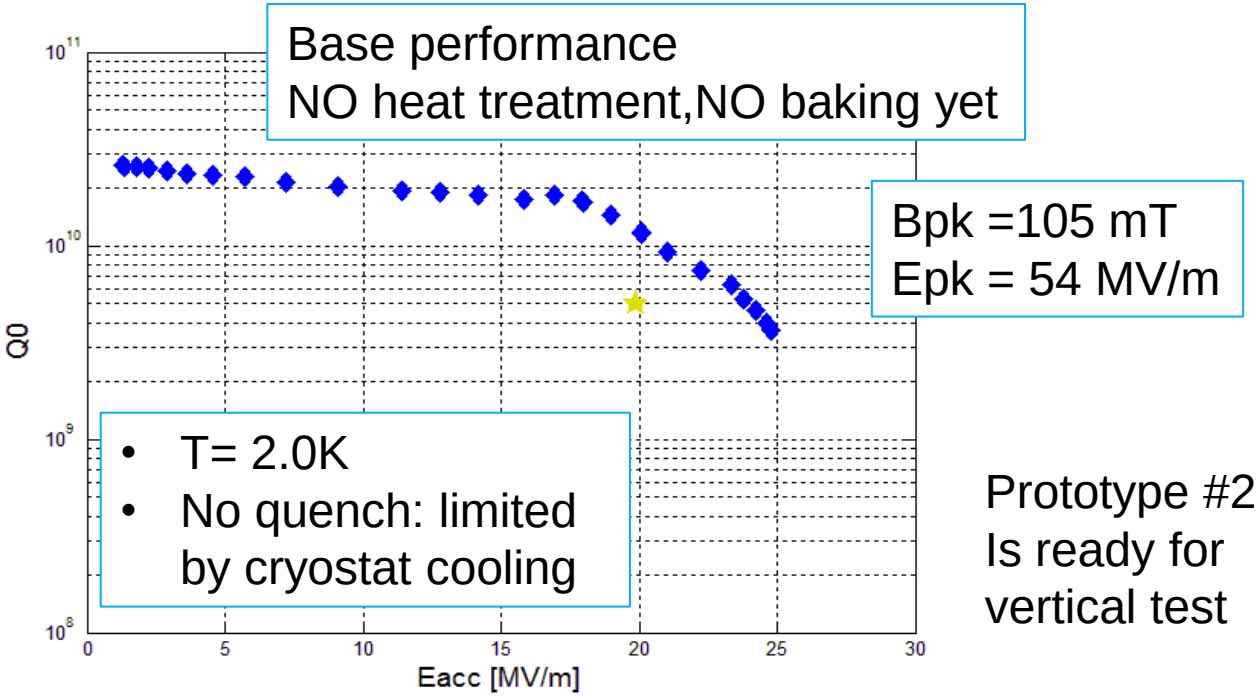

Prototype #2
Is ready for vertical test

ELLIPTICAL SECTION CRYOMODULE

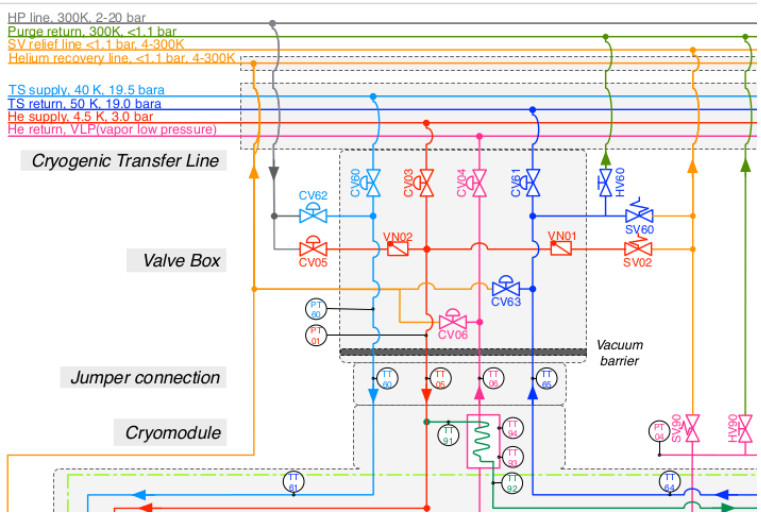

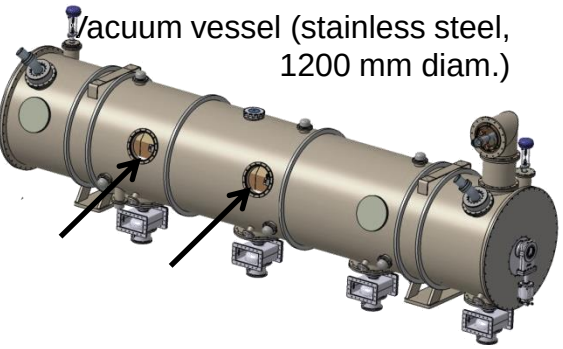

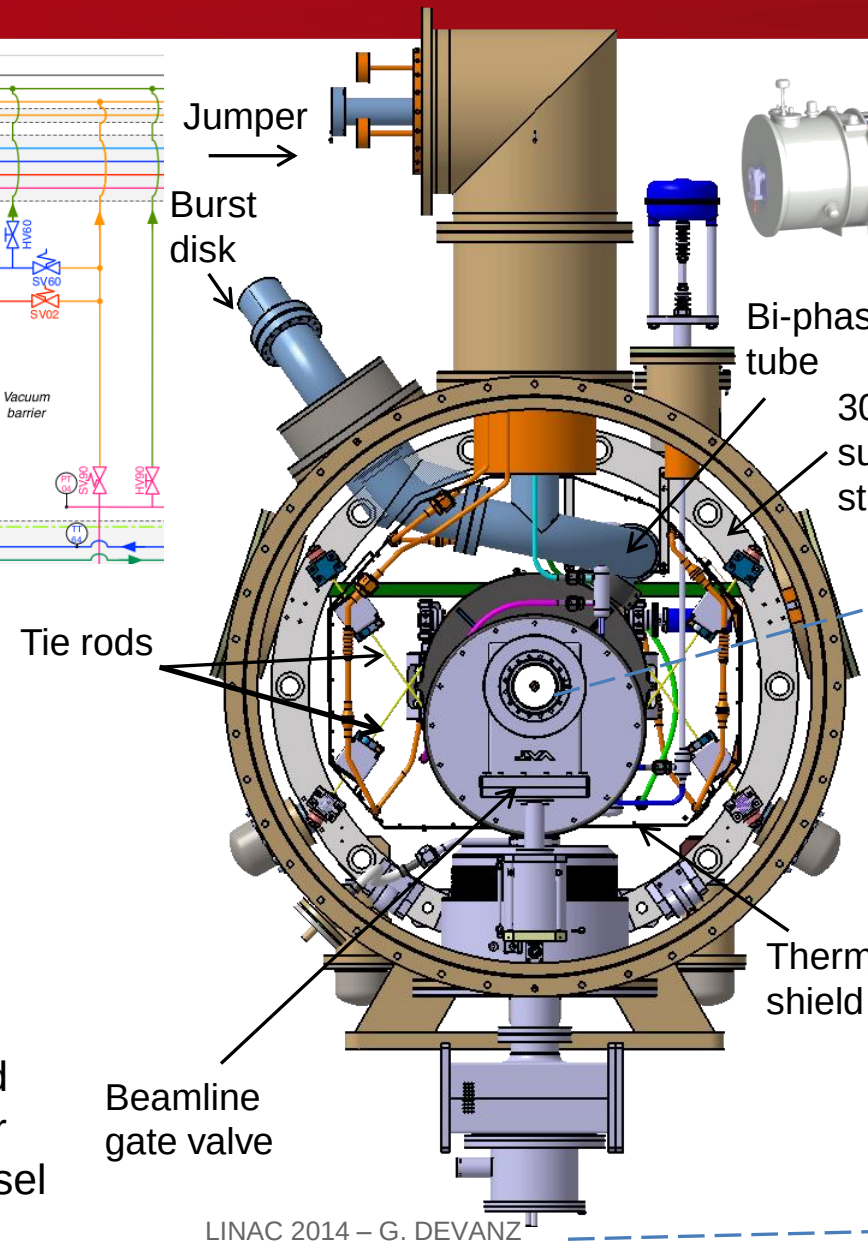

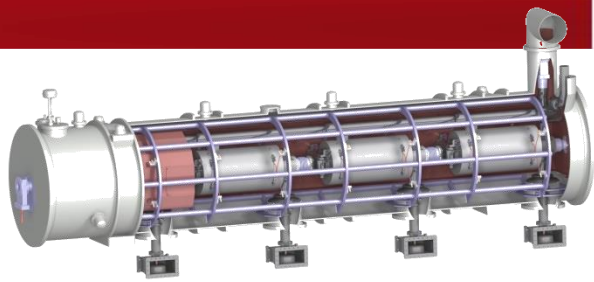

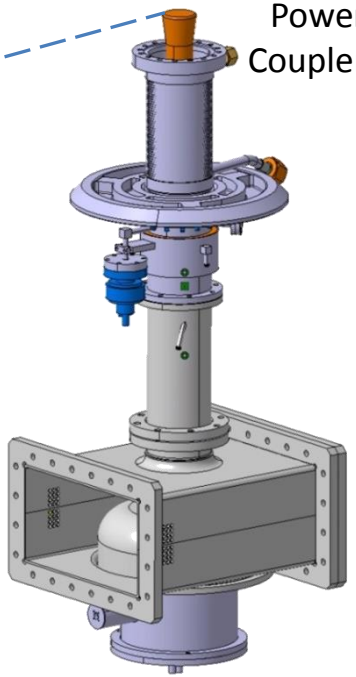

Updated design

- Simpler 40 K thermal shield
- Cryogenics and PED: lower pressure drop from He vessel to safety devices

EU PRESSURE VESSELS – PED 97/23/EC

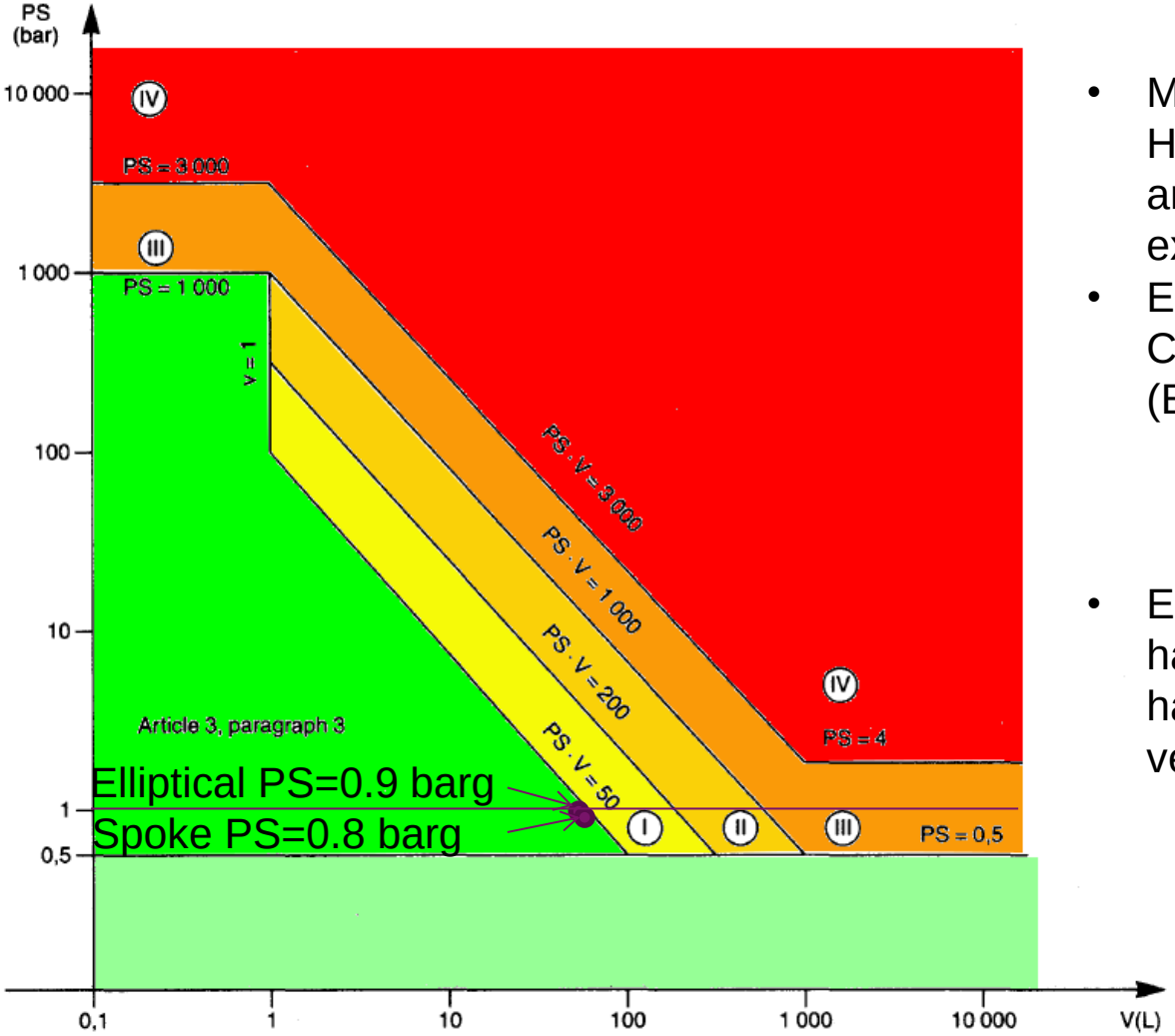

- Most critical « vessel » is the Helium volume between cavity and helium jacket (many welds, exotic materials)
- Example : XFEL cavities follow Cat. IV related verification units (B1,B,F,G modules)

  →If possible, favor lowest categories

- ESS spoke and ellipticals CM have been designed in order to have PS . V < 50 for the Helium vessel (Art. 3 § 3)

  →Design has to follow « Sound engineering practice »

PS = « Maximum Allowable Pressure », relative to atmospheric pressure (barg)

FUNDAMENTAL POWER COUPLER (FPC)

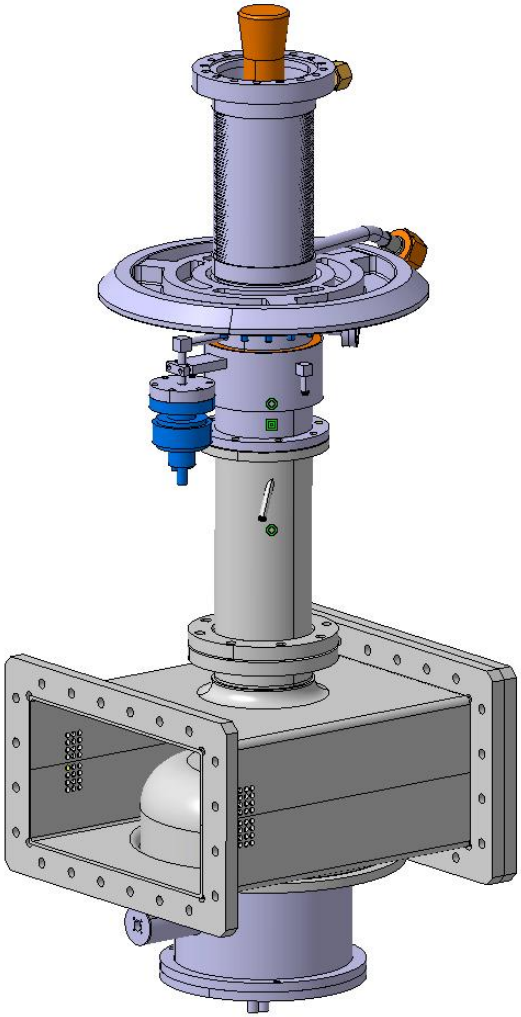

New design of the doorknob waveguide transition including a HV bias capacitor with RF trap

- Saclay HIPPI power coupler (KEK-type window) tested to 1.2 MW, 10% duty factor
- ESS requirements 1.1 MW, 4% duty factor
- RF test stand is being refurbished for pulse length of 3 ms
- Plan is to process 4 FPCs for the cryomodule, with 2 spares

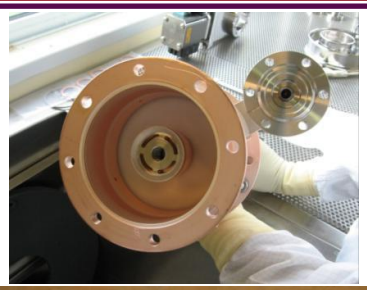

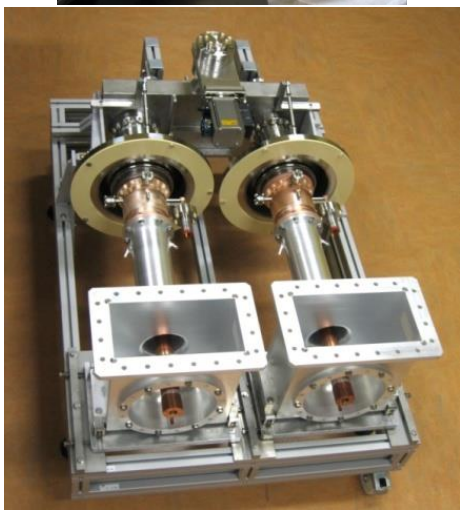

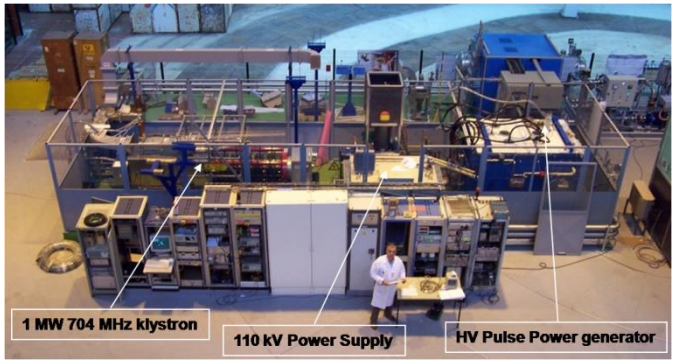

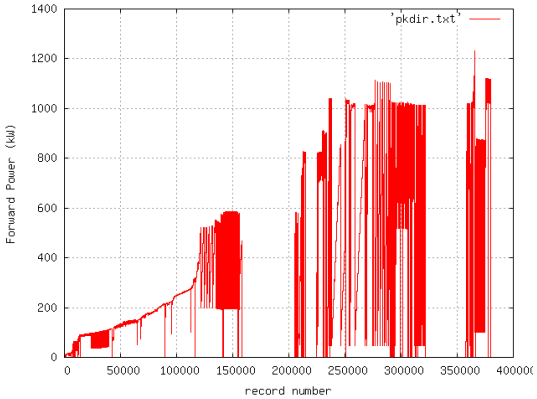

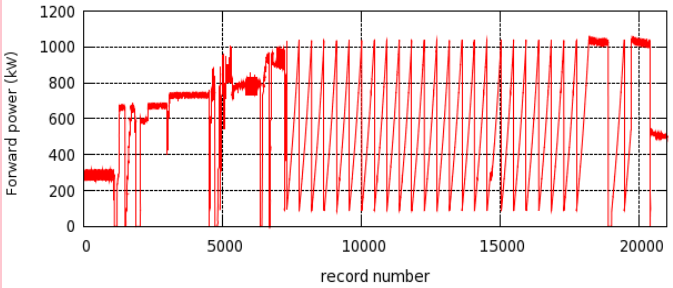

Test of the HIPPI power coupler a b=0.5 5-cell cavity at 1.8 K, full reflection, horizontal cryostat

TEST PLANS

Spoke :

- RF power test of the IPNO cryomodule at Upsala University

Ellipticals :

- 6 medium β cavities : manufacturing, preparation and vertical test
- 4 power couplers + 2 spares : manufacturing and conditioning
- Manufacturing of the cryomodule components
- Assembly of the Medium β cavities technical demonstrator (MECCTD)
- RF power test at saclay in CM test bunker

- Repeat with high β cavities technical demonstrator (HECCTD) re-using the MECCTD components

SPIRAL 2

SPIRAL 2 - SRF LINAC

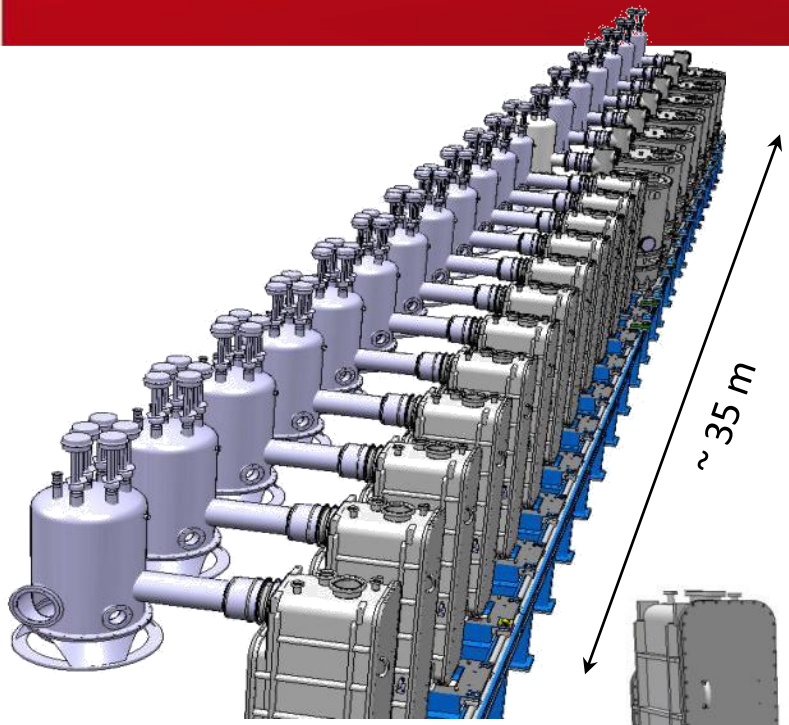

RIB facility installed in GANIL Caen

- Deuterons (5 mA) and ions up to q/A=1/6
- Temperature: 4.5 K
- Frequency : 88 MHz
- E_{acc} max : 6.5 MV/m

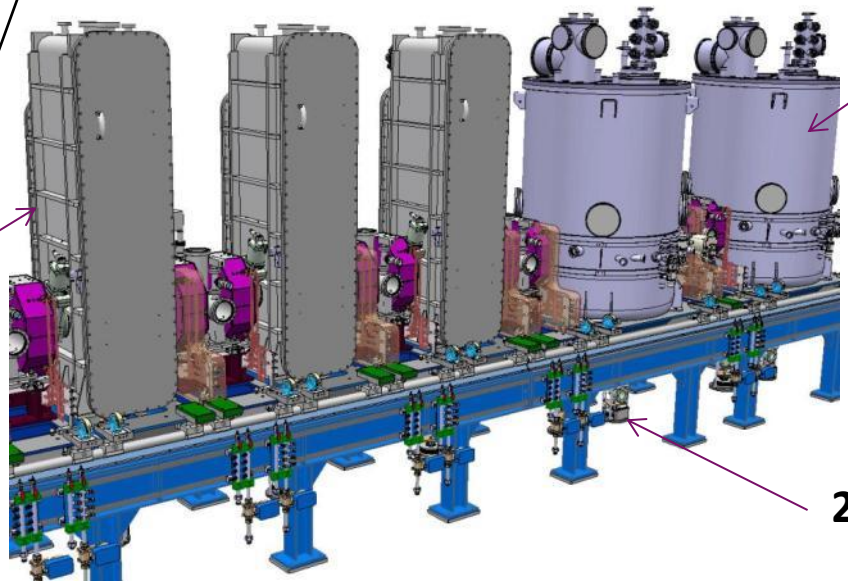

7 high beta CMs

14 β = 0.12 QWR

IPN Orsay

12 Low beta CMs

12 β = 0.07 QWR

CEA-IRFU Saclay

28 power couplers

LPSC Grenoble

QWR AND CM PERFORMANCE

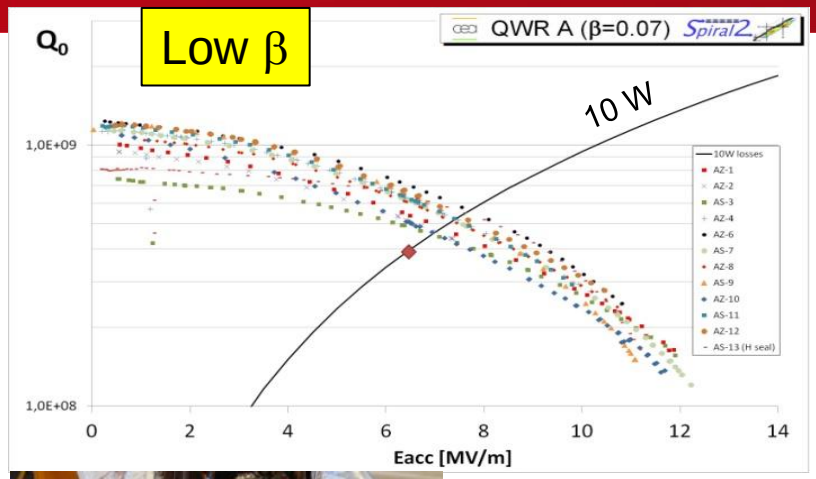

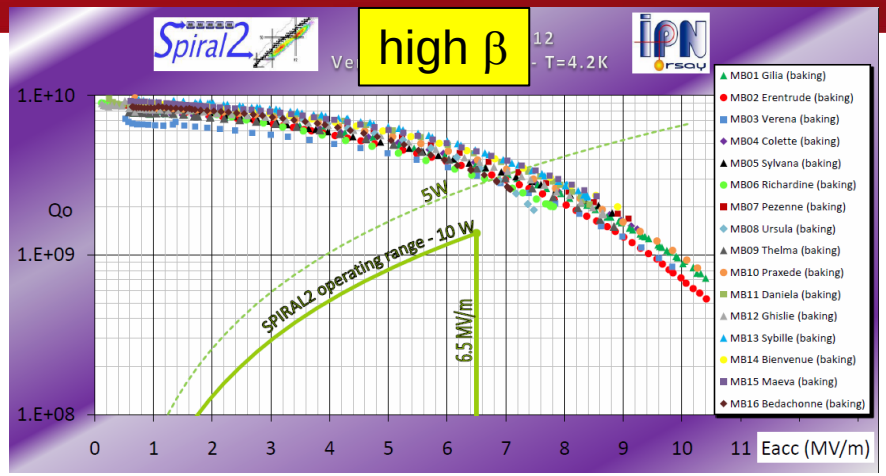

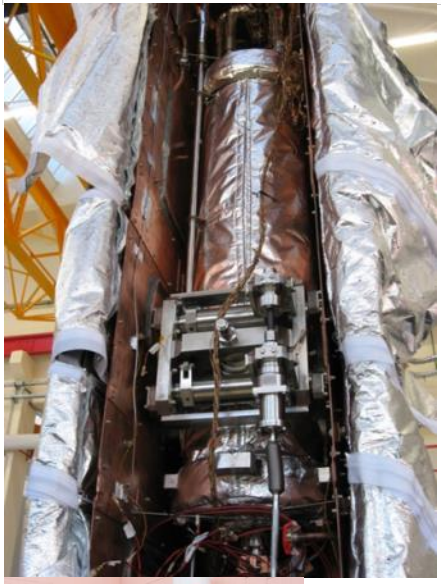

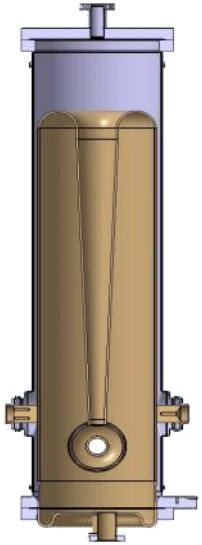

- All cavities above specifications
- 8/12 low β CMs tested
- Test transport Saclay-Ganil-Saclay
- 5/7 high β CMs tested

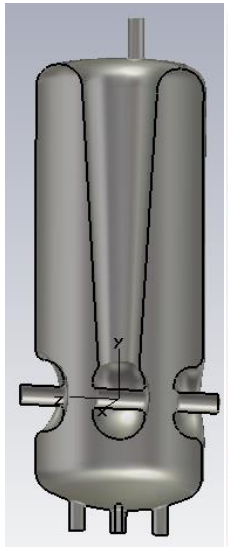

Test transport Saclay-Ganil-Saclay: No performance degradation

MORE on cryomodule performance :
P.-E. Bernaudin
THIOB03 next session

IFMIF-LIPAC

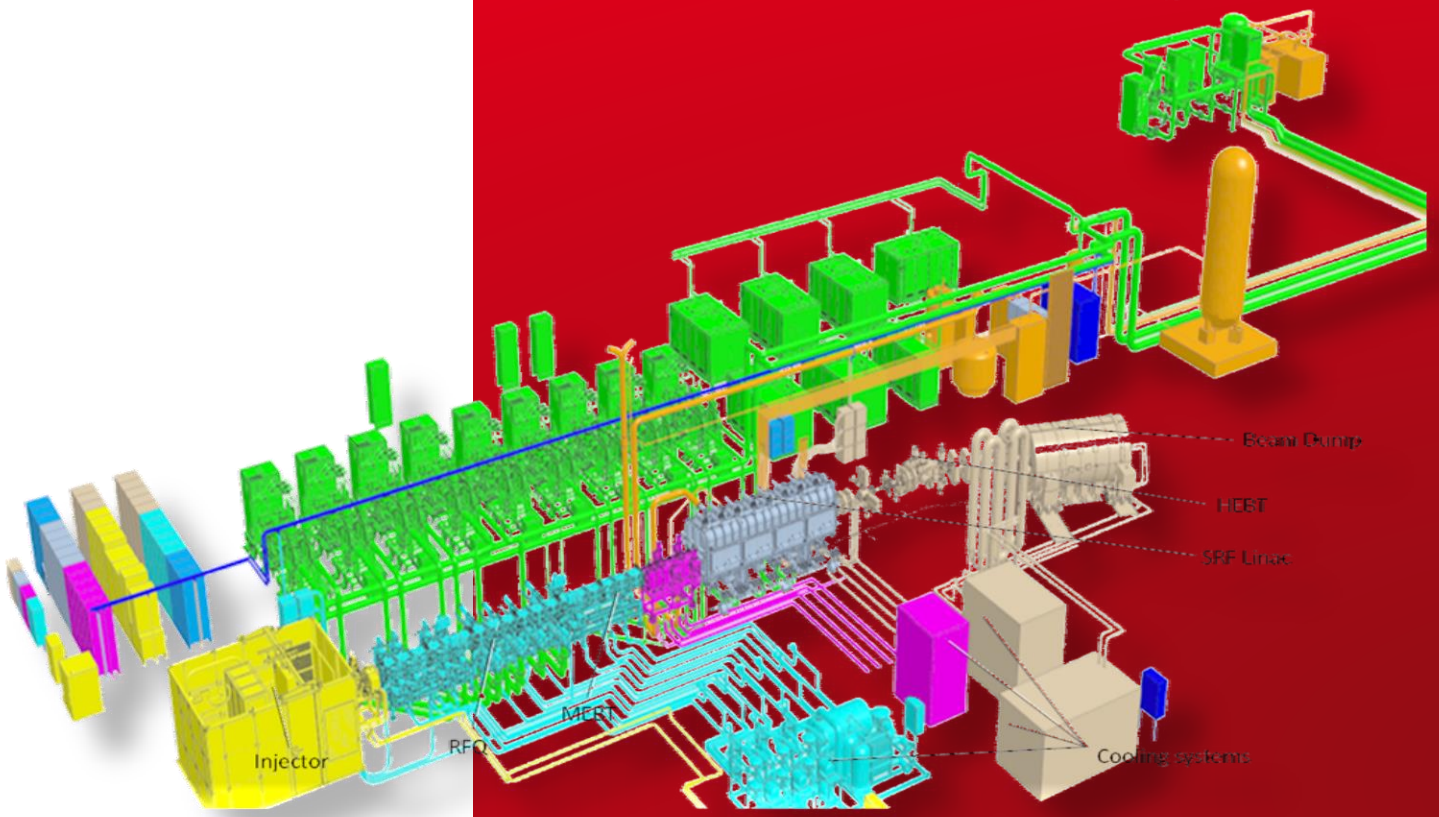

IFMIF/EVEDA

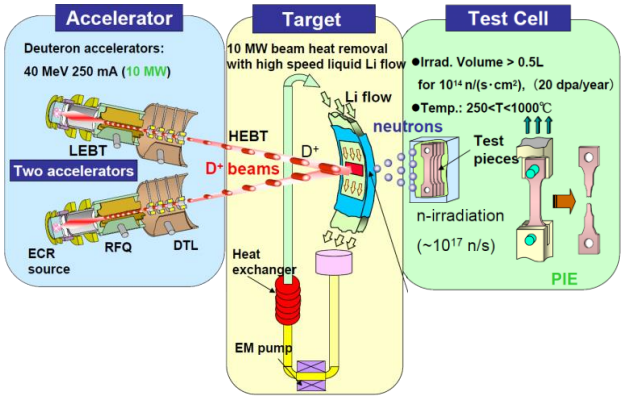

Objective of the International Fusion Material Irradiation Facility: characterization of materials with intense neutrons flux (10^{17} n/s) for the future Fusion Reactor DEMO (~150 dpa)

The Engineering Validation and Engineering Design Activities (EVEDA) aims to validate the key technologies

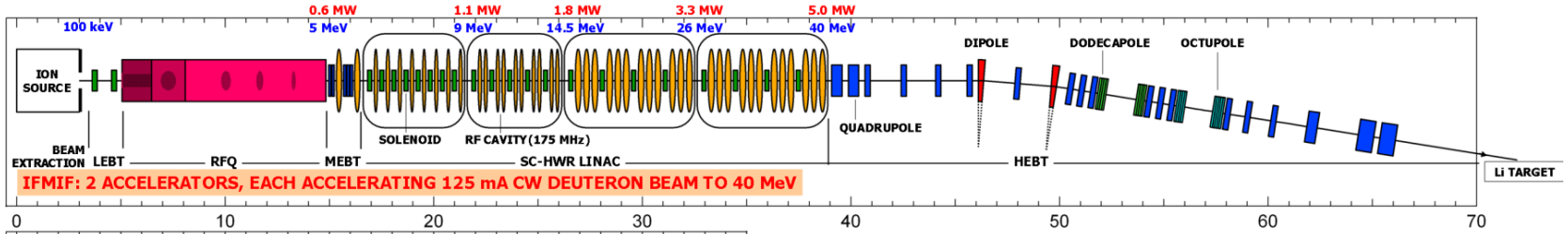

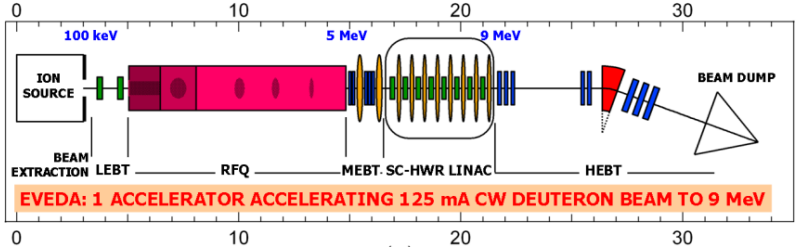

Linear **I**FMIF **P**rototype **Ac**celerator to be tested in Rokkasho – Japan (low energy part, 125 mA of D^+ CW beam)

The LIPAc cryomodule is developped by CEA with Ciemat (SC solenoïd package, coupler processing)

LIPAC CRYOMODULE

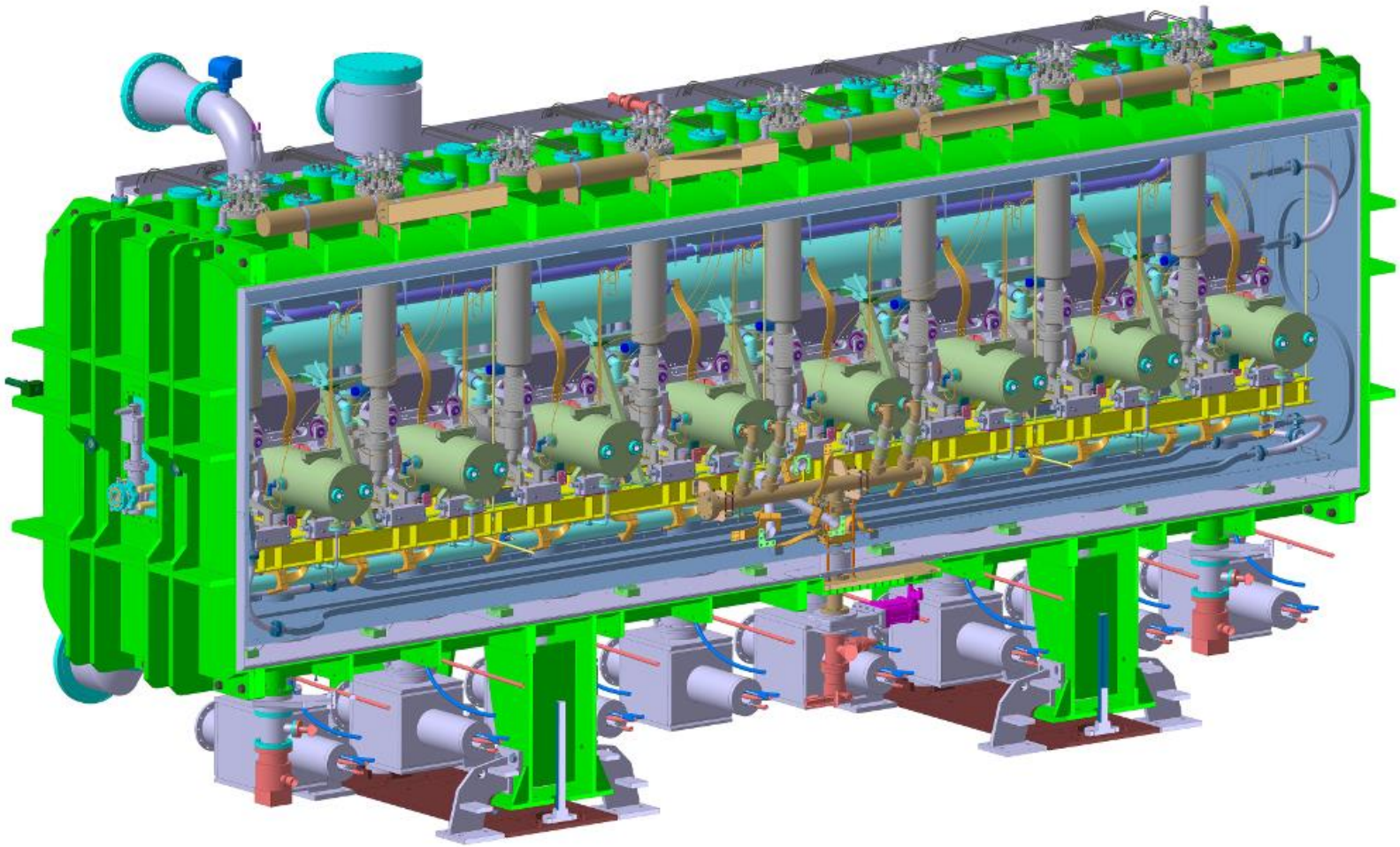

Contains 8 HWR + 8 SC solenoïd packages (solenoïd, steerers, BPM)

LIPAC CRYOMODULE

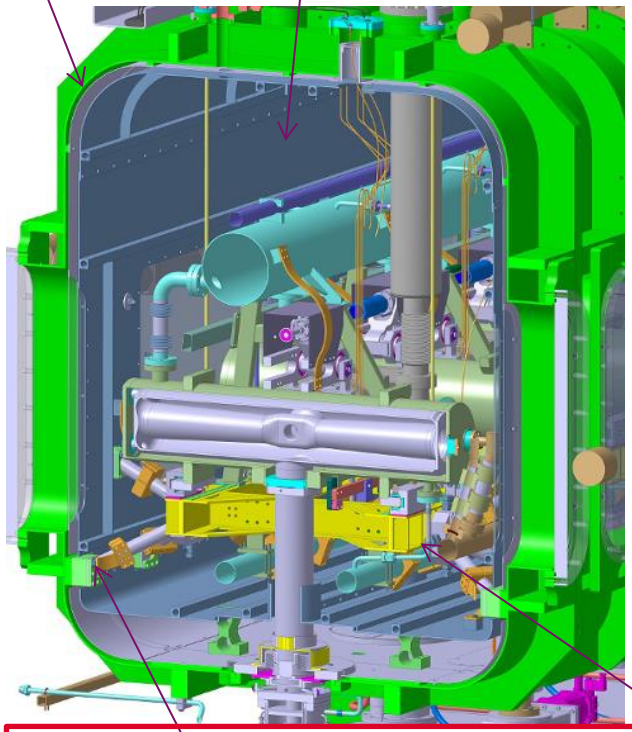

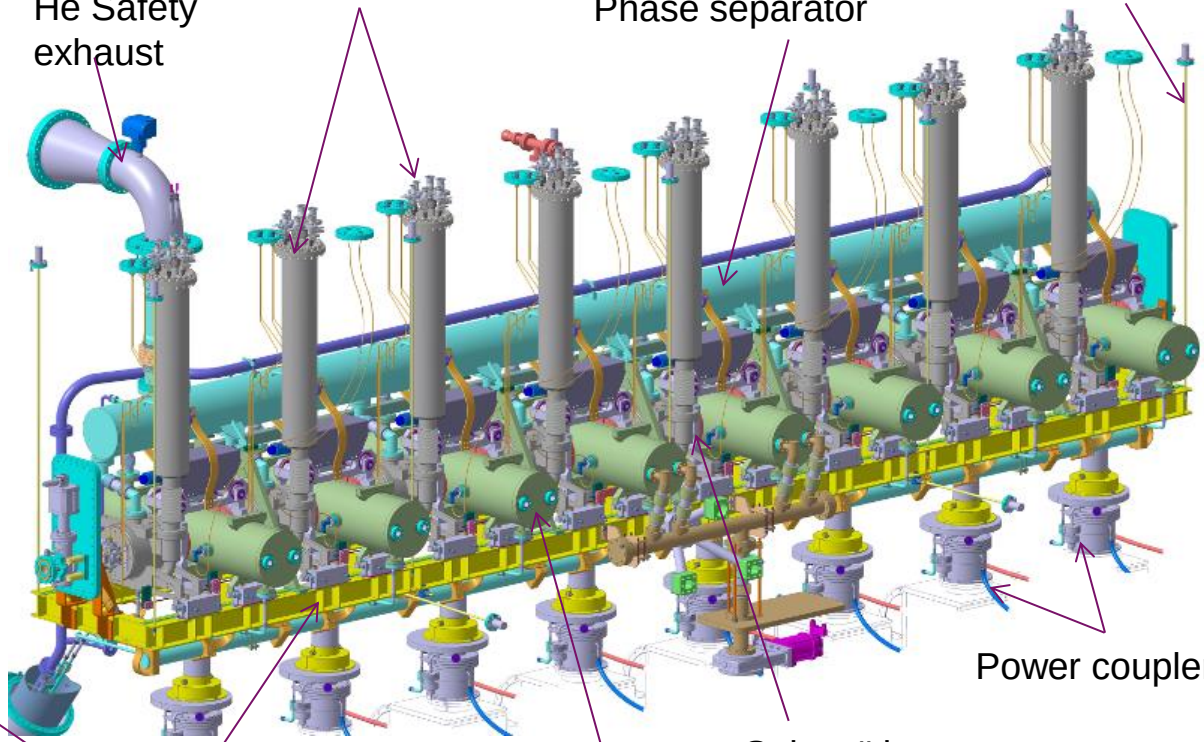

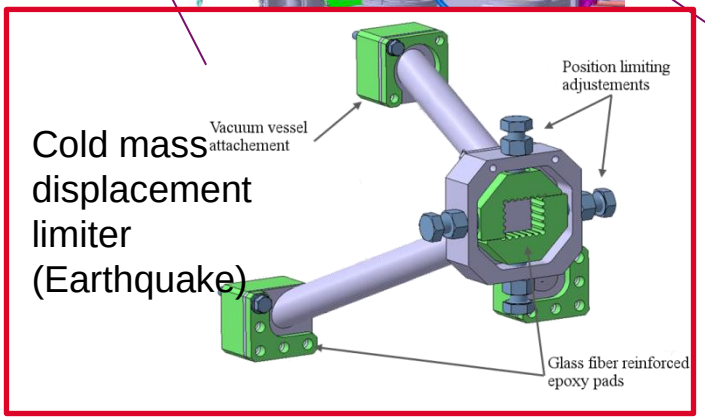

Cold mass displacement limiter (Earthquake)

support frame

HWR and SC solenoids positioning :
Support Frame + Xfel type C-rollers + invar rods

LIPAC HWRS

Parameter	Value	Unit
Frequency	175	MHz
Maximum r/Q	150	Ohm
Optimum beta	0.11	
Design beta	0.094	
r/Q @ design beta	140	Ohm
Epk/Eacc	4.8	
Bpk/Eacc	11	mT/(MV/m)
Nominal Eacc	4.5	MV/m
Nominal Qo	$5\ 10^8$	

After plunger tuner removal prototype P02 performance exceed specifications

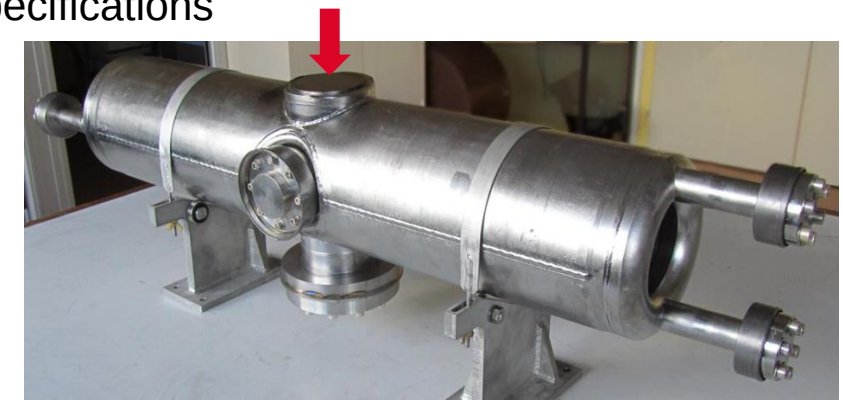

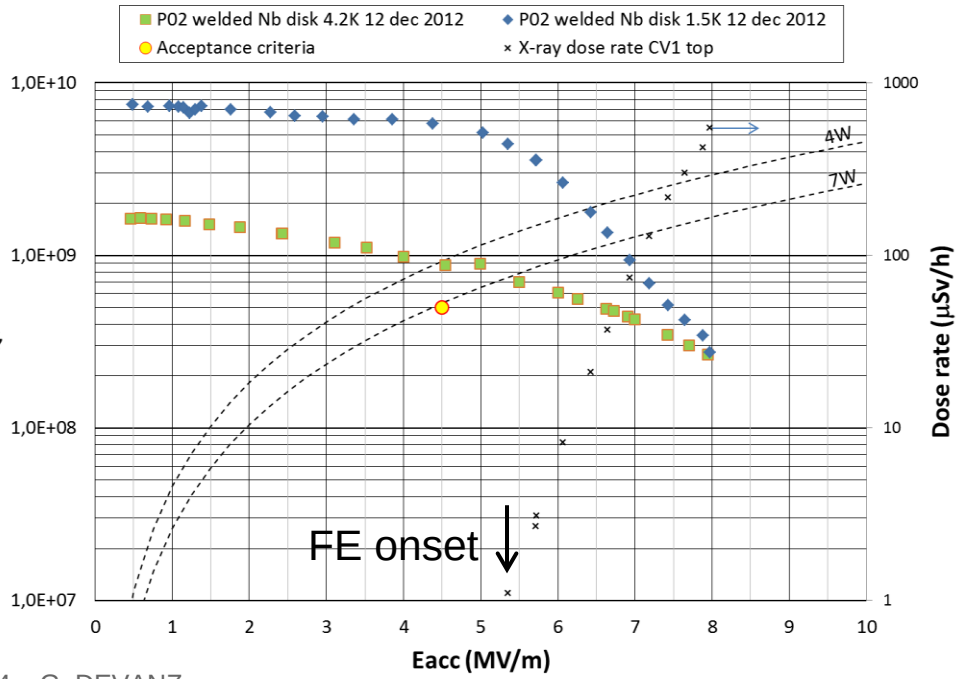

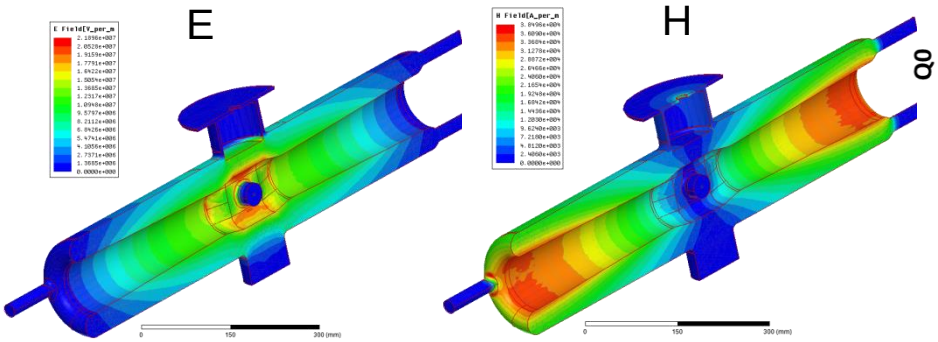

The original cavity design includes a superconducting plunger tuner

NEW DESIGN WITH COMPRESSION TUNER

- Disengagement system required for thermal transcients
- Displacement of each beam port is 0.3 mm (8000 N compressive force) → detuning of -78 kHz

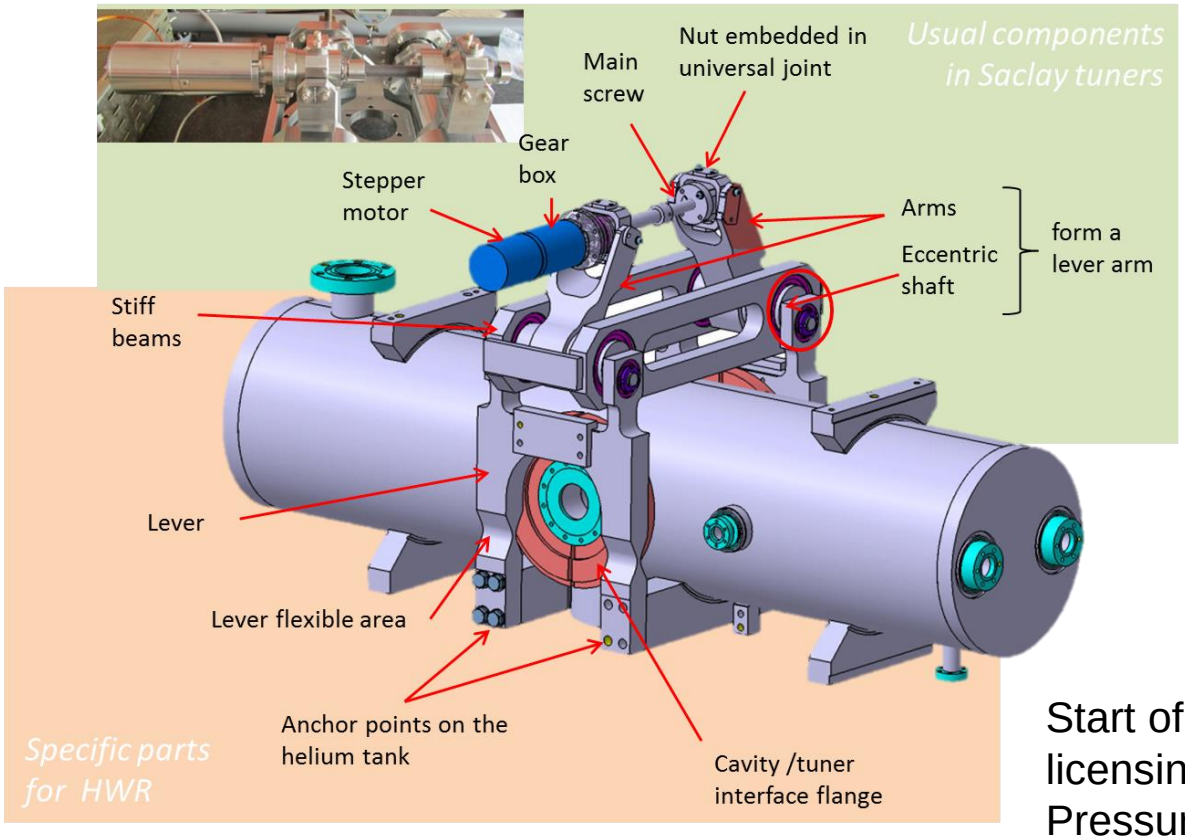

Concept of disengagement system with lever arm type tuner already tested on SPIRAL 2 low β cryomodules

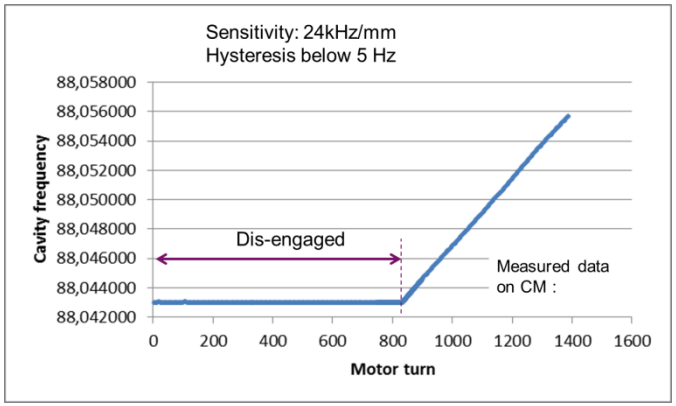

Start of production of HWR linked to licensing in the framework of Japanese High Pressure Gas Safety Law. Mainly issues with material and welds employed Nb, Ti, NbTi

COUPLER PROTOTYPE – HIGH POWER RF TEST

Design : 200 kW CW @ 175 MHz
Maximum forward power on LIPAc : 70kW

Conditioning at Ciemat:

- A pair of prototypes assembled in clean room on a test box
- Baking 170°C 100 hr
- Travelling wave up to 100kW CW: done
- Standing wave up to 100kW CW : done for most critical positions of Epk

→ couplers design is validated for the LIPAc

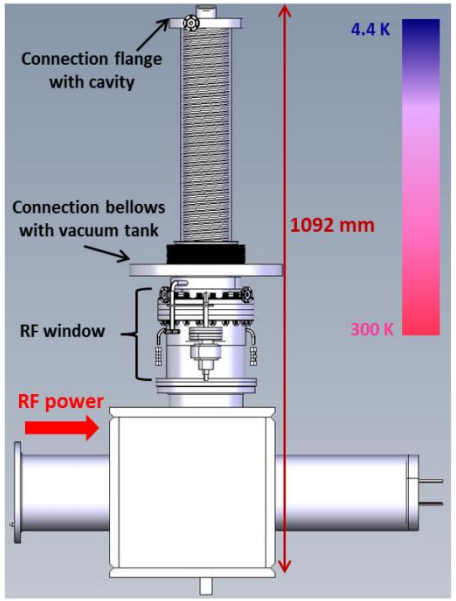

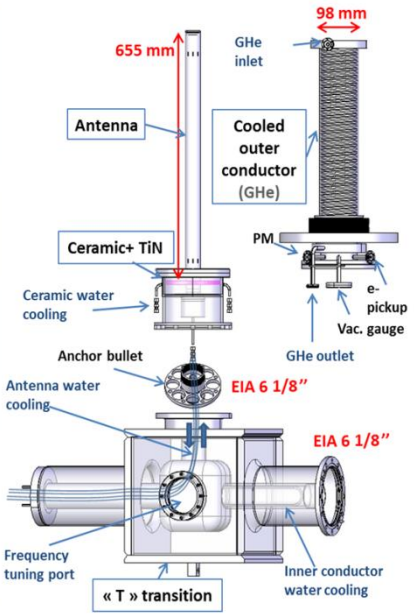

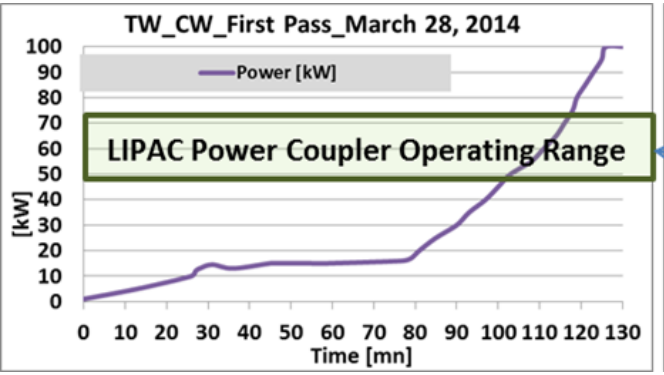

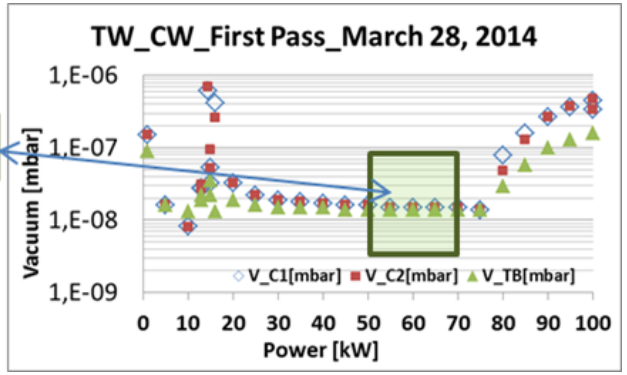

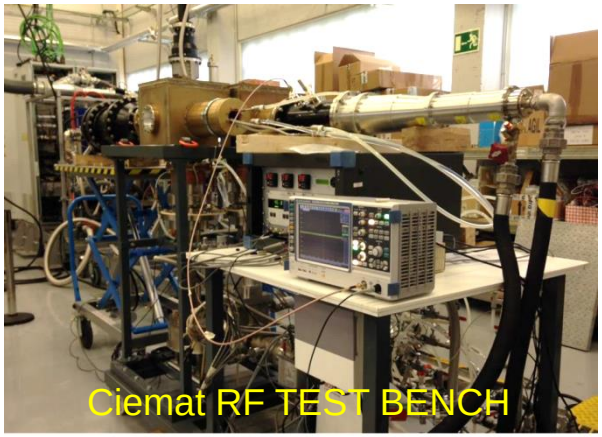

HORIZONTAL TEST CRYOSTAT - SATHORI

Recent decision to test the full cavity package (HWR + power coupler + tuner) before the LIPAc cryomodule assembly

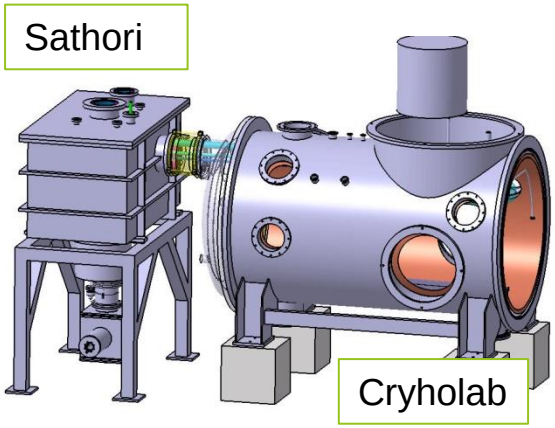

Current horizontal test cryostat Cryholab too small
Built a satellite as a simple top-loading cryostat

- Uses internal cryholab cryogenic circuits and components
- Includes its thermal shield and cryo safety devices
- Equiped with a magnetic shield
- HWR, coupler and tuner are tested in CM position
- RF power required 30 kW CW

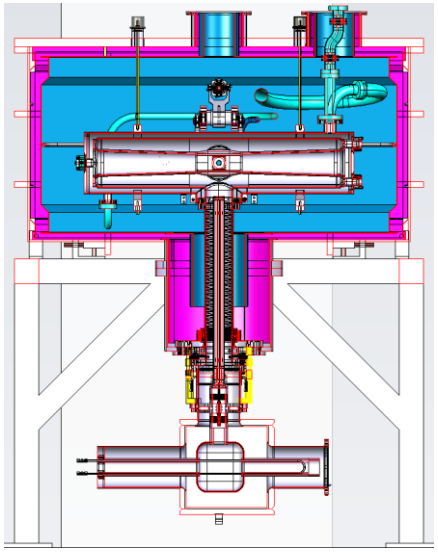

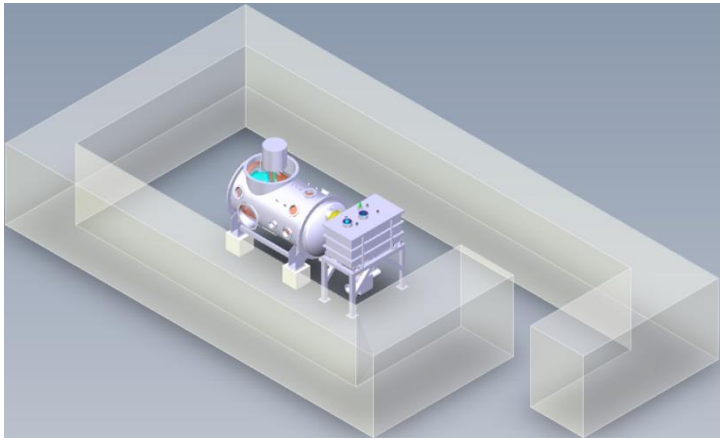

NEW INFRASTRUCTURE

New ISO7+ISO5 clean room required for ESS cavity string assembly, will be used for SPIRAL2 last CM assembly, and ifmif HWR preparation

Thank you for your attention

DE LA RECHERCHE À L'INDUSTRIE
cea

Irfu
Institut de recherche
sur les lois fondamentales
de l'Univers